GASGAS

2013

TX-RANDONNE

125 DESPIECE MOTOR

DESPIECE / / PART LIST

DICIEMBRE / DECEMBER / DEZEMBER / DÈCEMBRE / DICEMBRE 2012

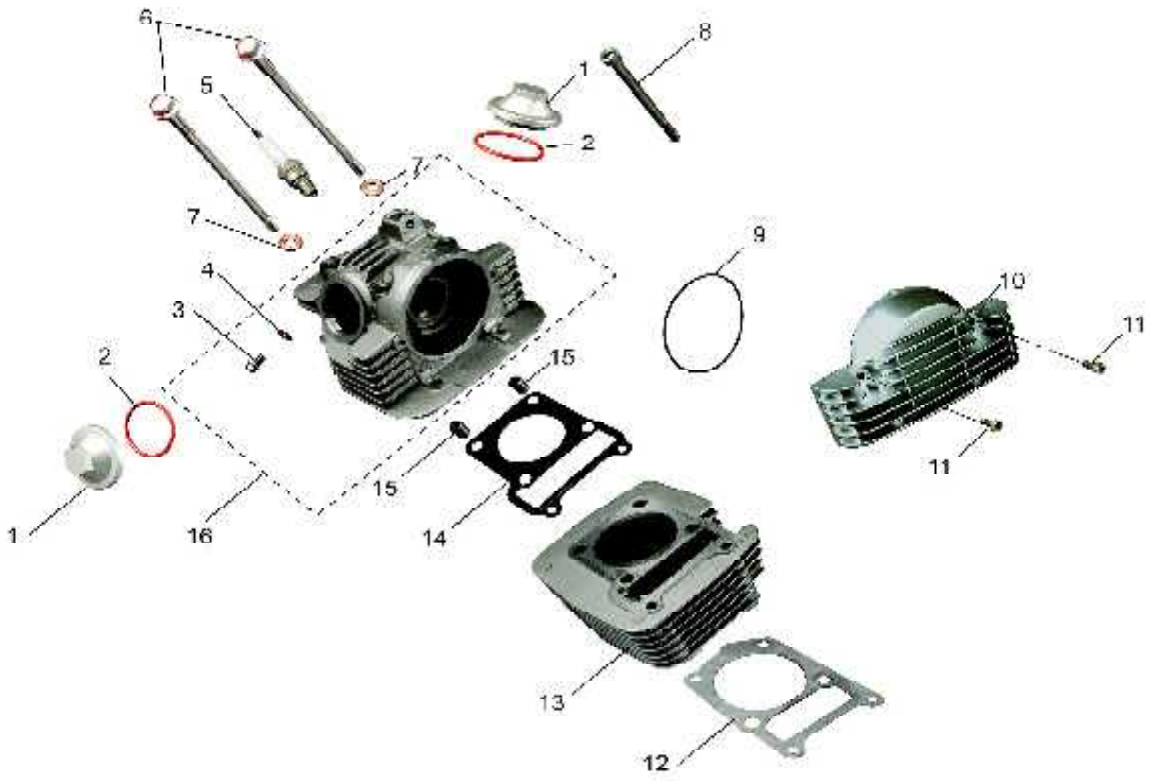
6
5
7
7
4
3
2
1
16
15
15
14
13
12
1
2
8
7
9
10
11
11

Nº	DESCRIPCION / DESCRIPTION	125	Cant.
1	VALVE COVER	F28-100202-0	2
2	O-RING	ZA1-100602-0	2
3	BOLT	BQ/JRYP80-M6×10	1
4	WASHER	ZA1-100405-0	2
5	SPARK PLUG (NGK - CR8HSA)	A6RTC	1
6	BOLT	F28-100851-0	4
7	WASHER	ZA1-100404-0	4
8	SCREW	BGB/T70.1-M6×90	2
9	O-RING	F28-100601-0	1
10	SPROCKET ROOM SIDE COVER	F28-100201-A	1
11	BOLT	BQ/JRYP80-M6×20	2
12	CYLINDER GASKET	F28-200801-0	1
13	COMBINATION CYLINDER	F28-201000-0	1
14	CYLINDER HEAD GASKET	F28-100401-0	1
15	PIN	BQ/JRYP96-10×14	2
16	CYLINDER HEAD ASSY	F28-111000-0-W1	1

GAS GAS Motor 1

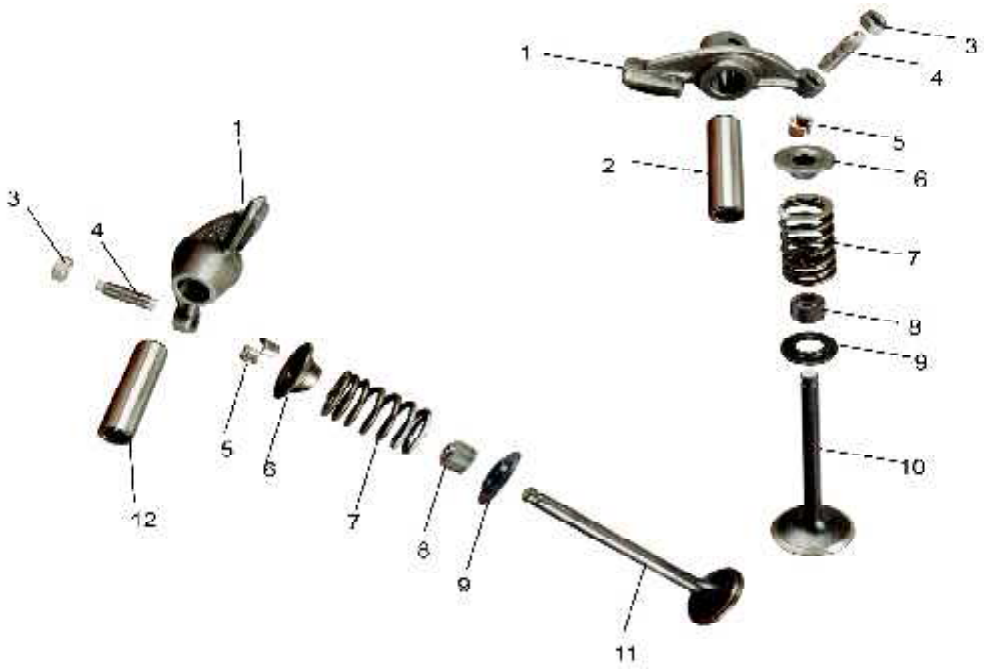
1
3
4
2
5
6
7
8
9
10
11
12

Nº	DESCRIPCION / DESCRIPTION	125	Cant.
1	VALVE ROCKER	F28-110305-0	2
2	ROCKER SHAFT 2	F28-110002-0	1
3	LOCKING NUT	ZA1-110850-0	2
4	ADJUSTMENT SCREW	ZA1-110851-0	2
5	AIR LOCK FOLDER	F13-110302-0	4
6	VALVE SPRING CAP	F13-110301-0	2
7	VALVE SPRING	F13-110701-0	2
8	VALVE ROD SEALS	F13-112000-0	2
9	VALVE SPRING SEAT	F13-110401-0	2
10	INTAKE VALVE	F13-110304-0	1
11	EXHAUST VALVE	F13-110303-0	1
12	ROCKER SAHFT 1	F28-110001-0	1

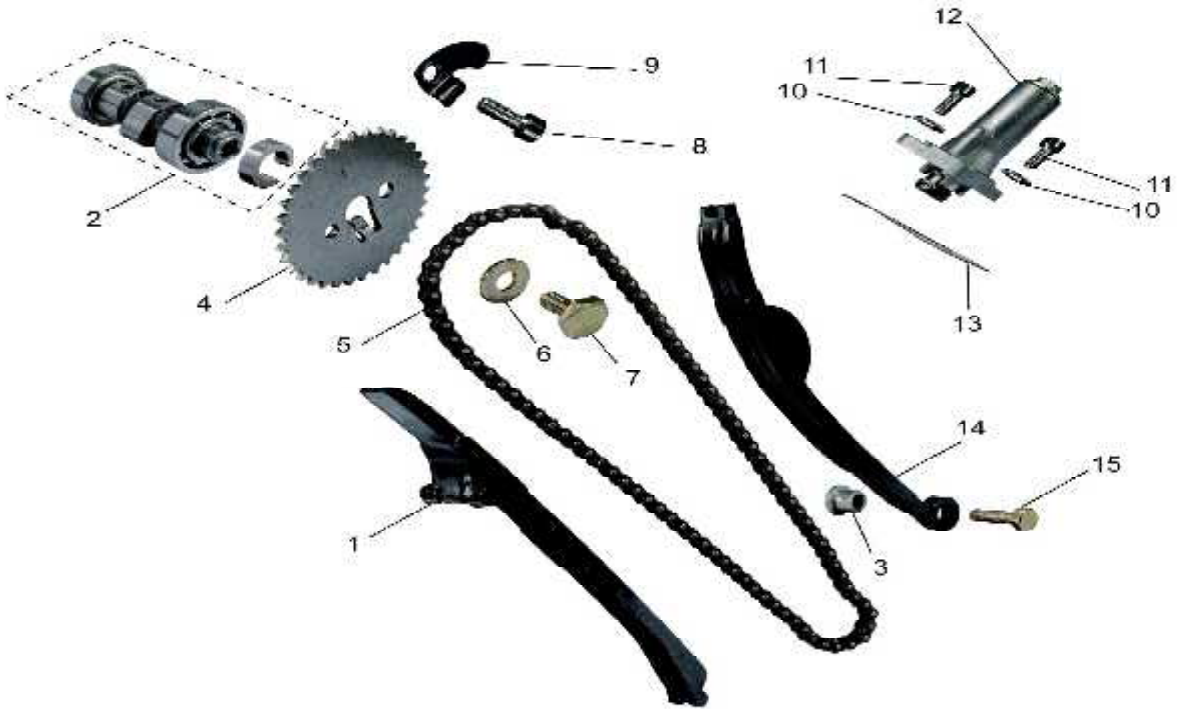
12
11
10
9
8
11
10
2
4
5
6
7
13
14
15
1
3

Nº	DESCRIPCION / DESCRIPTION	125	Cant.
1	UNDER THE GUIDE PLATE ASSY	F28-140000-0	1
2	CAMSHAFT COMBINATION	F13-113000-0	1
3	BUSH	F28-100002-0	1
4	TIMING SPROCKET	F28-100001-0	1
5	TIMING CHAINS	F28-130000-0	1
6	WASHER	ZA1-100402-0	1
7	SCREW	ZA1-100850-0	1
8	SCREW	BGB/T70.1M61252	1
9	PLATE	F28-110401-0	1
10	WASHER	ZA1-100405-0	2
11	BOLT	BGB/T70.1M61656	2
12	CHAIN TENSION	ZA1-120000-0	1
13	TENSIONER GASKET	ZA1-100801-0	1
14	THE GUIDE PLATE ASSY	F28-150000-0	1
15	HEXAGON BOLT	BGB/T5783M62032	1

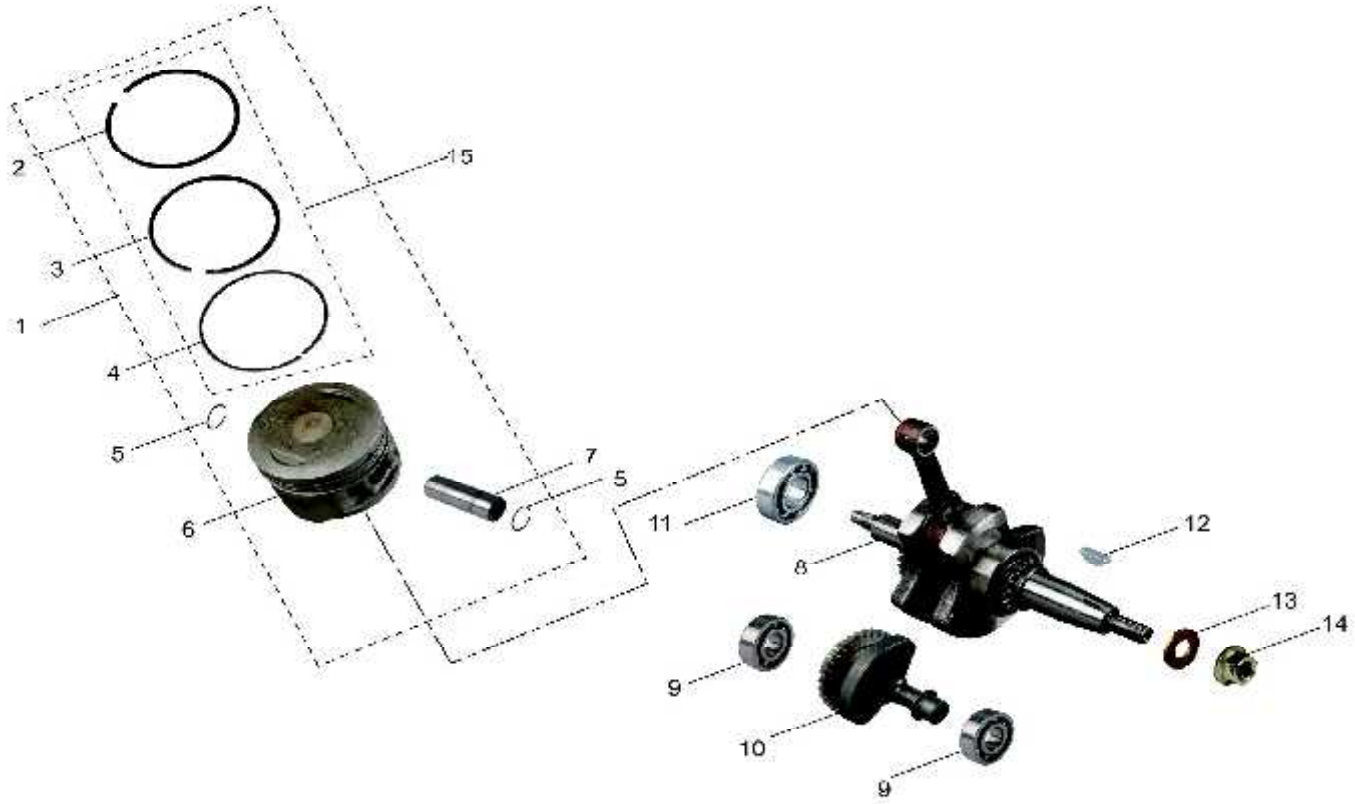
2
15
3
1
4
5
6
7
5
11
8
12
13
14
9
10
9

Nº	DESCRIPCION / DESCRIPTION	125 / 280 / 300	Cant.
1	PISTON ASSY	F13-220000-0	1
2	PISTON 1	F13-220201-0	1
3	PISTON 2	F13-220202-0	1
4	OIL RING	F13-221000-0	1
5	RING	FB-200701-0	2
6	PISTON	F13-220203-0	1
7	PISTON	F13-200001-0	1
8	CRANKSAHFT ASSY	F28-210000-0	1
9	ROLLING	ZA1-201000-0	2
10	BALANCE SHAFT ASSY	F28-230000-0	1
11	ROLLING	BGBT2766205CS18	1
12	WOODRUFF KEY	BGB/T1099.1-3×5×13	1
13	WASHER	ZA1-400401-0	1
14	NUT	BQ/JRYP4-12-E2	1
15	PISTON ASSY	F13-220202-0L01	1

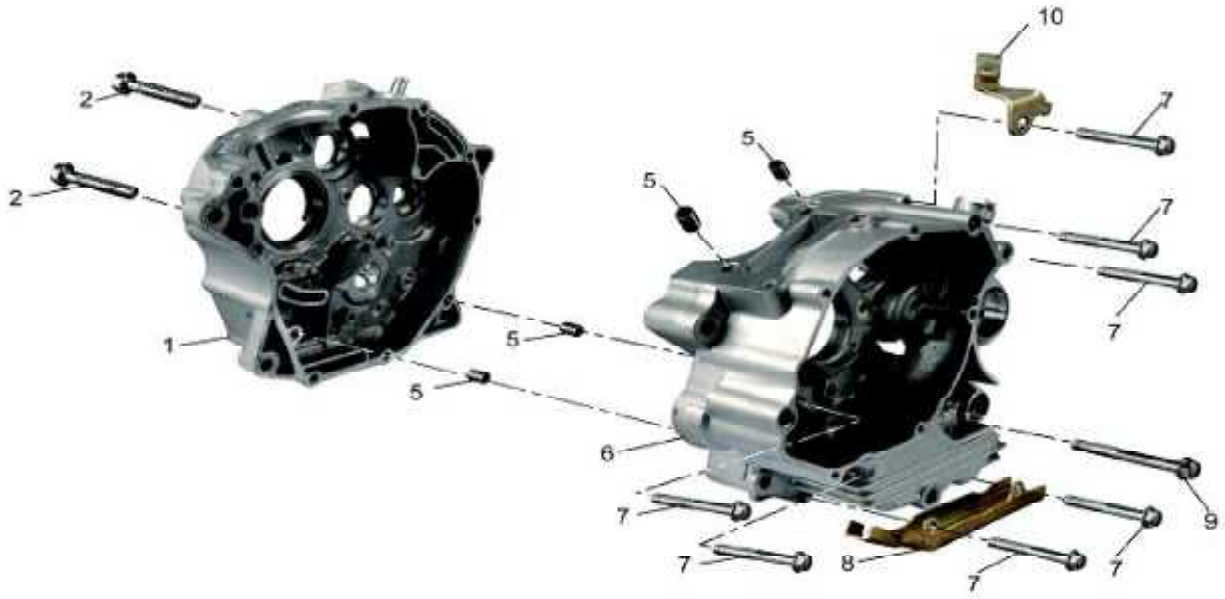
10
2
2
7
5
5
7
7
1
5
5
6
7
9
7
8
7
7

Nº	DESCRIPCION / DESCRIPTION		125	Cant.
1	RIGHT CRANKCASE ASSY		F28-320000-0	1
2	BOLT		BQ/JRYP80M63026	2
5	PIN		BQ/JRYP96101400	4
6	LEFT CRANKCASE ASSY		F28-310000-0	1
7	BOLT		BQ/JRYP80M64526	7
8	WIRE BOARD		F28-300401-0	1
9	BOLT		BQ/JRYP80M65526	1
10	REINFORCEMENT BRACKET		F28-400401-0	1

13
18
7
17
15
14
12
7
16
15
6
5
4
11
10
3
2
9
8
1
6
6
7

Nº	DESCRIPCION / DESCRIPTION	125	Cant.
1	LEFT CRANKCASE COVER	F28300201BW1005	1
2	PIN	BQ/JRYP96101400	2
3	LEFT COVER GASKET	F28-300801-0	1
4	VOLTAGE CLAMP	F28-300701-0	1
5	BOLT	BQ/JRYP80M61021	1
6	BOLT	BQ/JRYP80M65026	6
7	BOLT	BQ/JRYP80M63526	8
8	O-RING	ZA1-300605-0	1
9	ADJUSTING MANHOLE COVERS	F28-300204-0	1
10	OBSERVATION HOLE COVER	F28-300202-0	1
11	O-RING	ZA1-300604-0	1
12	O-RING	ZA1-300601-0	1
13	OIL FEET	F28-301000-0	1
14	RIGHT COVER GASKET	F28-300802-0	1
15	PIN	BQ/JRYP96101400	2
16	OIL SEAL	ZA1-303000-0	1
17	RIGHT CRANKCASE COVER ASSY	F283400000W1005	1
18	BOLT	BQ/JRYP80M64526	2

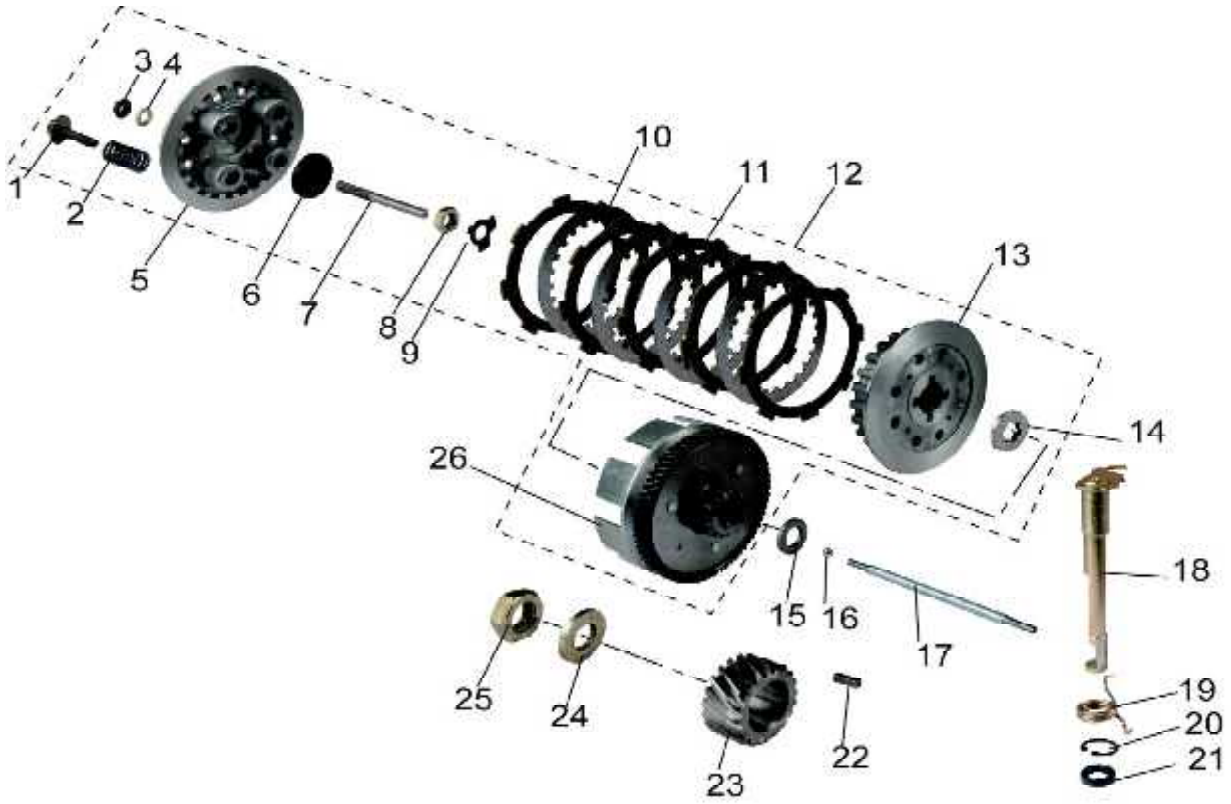
1
2
3
4
5
6
7
8
9
10
11
12
13
14
15
16
17
18
19
20
21
22
23
24
25
26

Nº	DESCRIPCION / DESCRIPTION	125	Cant.
1	WITH PAD BOLT	F28-425000-0	4
2	CLUTCH SPRING	F28-420701-0	4
3	HEXAGON NUTS	BGB/T6170-M6-32	1
4	WASHER	BGB/T97.1-6-31	1
5	PLATEN	F28-420201-0	1
6	THRUST PLATE	F28-420851-0	1
7	PUTTERS	F28-420852-0	1
8	NUT	F28-400851-0	1
9	LOCK WASHERS	F28-400402-0	1
10	CLUTCH	F28-420402-0	4
11	FRICTION	F28-426000-0	5
12	CLUTCH	F28-420000-0	1
13	CLUTCH WHEEL COMBINATION	F28-424000-0	1
14	SPLINE WASHER	F28-420401-0	1
15	THRUST WASHERS	F28-400001-0	1
16	BALL	BGBT3084762G10b	1
17	PUSH ROD COMBINATION	F28-401000-0	1
18	CONTROL SHAFT ASSY	F28-430000-0	1
19	TORSION SPRING	F28-400701-0	1
20	HOLE SNAP RING	BGB/T893.1-20B8	1
21	OIL SEAL	F28-402000-0	1
22	FLAT KEY	F28-400002-0	1
23	MAIN DRIVE GEAR	F28-400301-0	1
24	WASHER	ZA1-400401-0	1
25	NUT	ZA1-400850-0	1
26	CLUTCH GEAR ASSY	F28-421000-0	1

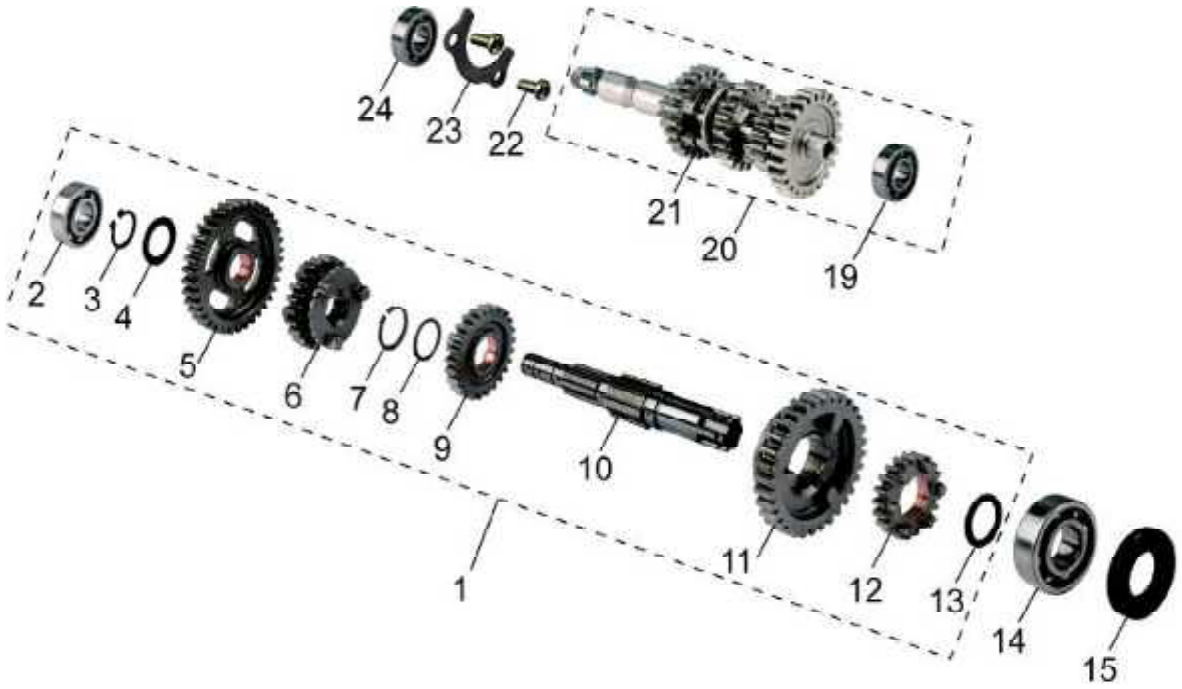
24
23
22
21
20
19
2
3
4
5
6
7
8
9
10
1
11
12
13
14
15

Nº	DESCRIPCION / DESCRIPTION	125	Cant.
1	DRIVE SHAFT ASSY	F28-520000-0	1
2	ROLLING	BGB/T276-6202RS	1
3	CIRCLIP	ZA1-520402-0	1
4	WASHER	F28-520401-0	1
5	A GEAR DRIVEN GEAR	F28-520301-0	1
6	SIDANG DRIVEN GEAR	F28-520304-0	1
7	RING	ZA1-500402-0	1
8	WASHER	ZA1-510401-0	1
9	THIRD GEAR DRIVEN GEAR	F28-520303-0	1
10	DRIVE SHAFT COMBINATION	F28-521000-0	1
11	SECOND GEAR DRIVEN GEAR	F28-520302-0	1
12	5 GEAR DRIVEN GEAR	F28-520305-0	1
13	WASHER	ZA1-520401-0	1
14	ROLLING	BGB/T276-6204	1
15	OIL SEAL	CY80-01-77	1
19	ROLLING	BGB/T276-6201RS	1
20	SPINDLE ASSY	F28-510000-0	1
21	SPINDLE	F28-510301-0	1
22	SCREW	BGB/T823M6×1202	2
23	BEARING SHIELD	F28-500403-0	1
24	ROLLING	BGB/T276-6203	1

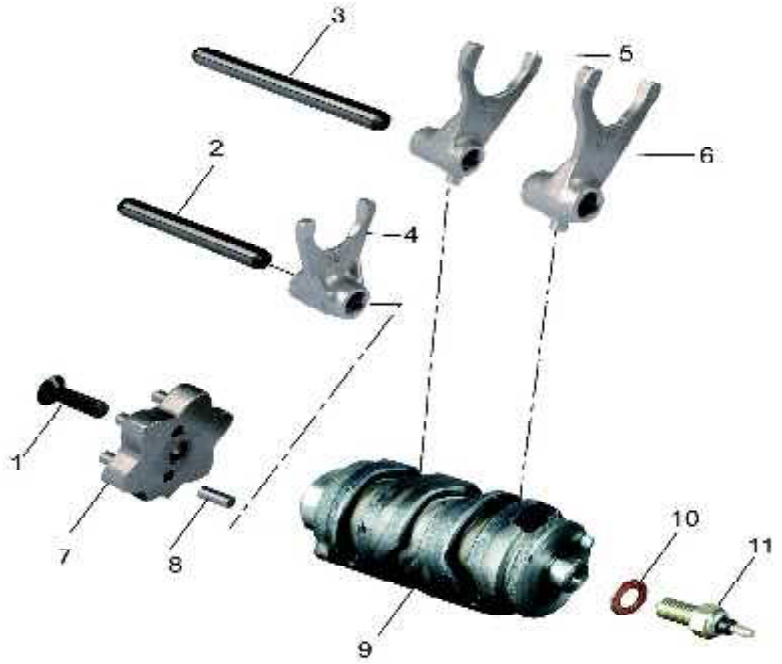
3
5
2
6
4
1
7
8
10
11
9

Nº	DESCRIPCION / DESCRIPTION	125	Cant.
1	SCREW	BGB/T70.3M62058	1
2	SHORT GEAR SHAFT	F28-500002-0	1
3	LONG GEAR SHAFT	F28-500001-0	1
4	FORK 2	F28-500302-0	1
5	FORK 3	F28-500303-0	1
6	FORK 1	F28-500301-0	1
7	STAR FERRY	F28-500751-0	1
8	DRIVE SALES	FG-100001-0	1
9	SHIFTING CAMSHAFT ASSY	F28-540000-0	1
10	WASHER	FG-500404-0	1
11	NEUTRAL GEAR SWITCH	FG-508000-0	1

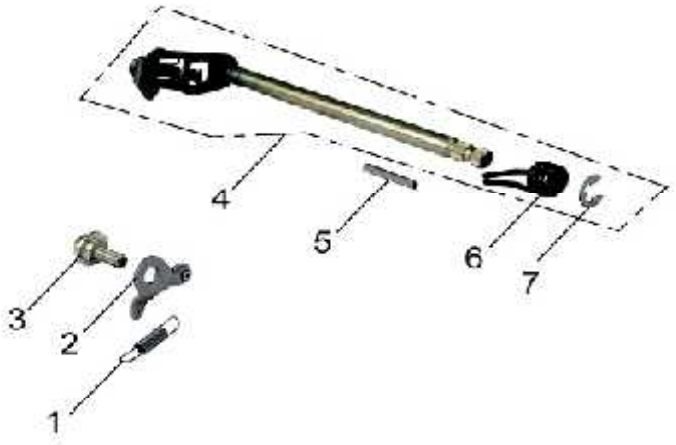
4
5
6
7
3
2
1

Nº	DESCRIPCION / DESCRIPTION		125	Cant.
1	LIMIT SPRING		F28-500702-0	1
2	LIMIT LEVER ASSEMBLY		F28-560000-0	1
3	BOLT		F3-500851-0	1
4	SHIFT SHAFT ASSEMBLY		F28-530000-0	1
5	TORSION SPRING PIN		F28-500003-0	1
6	TORSION SPRING		F28-530701-0	1
7	E-SHAPPED OPENING RING		BQ/JRYP98-10-B1	1

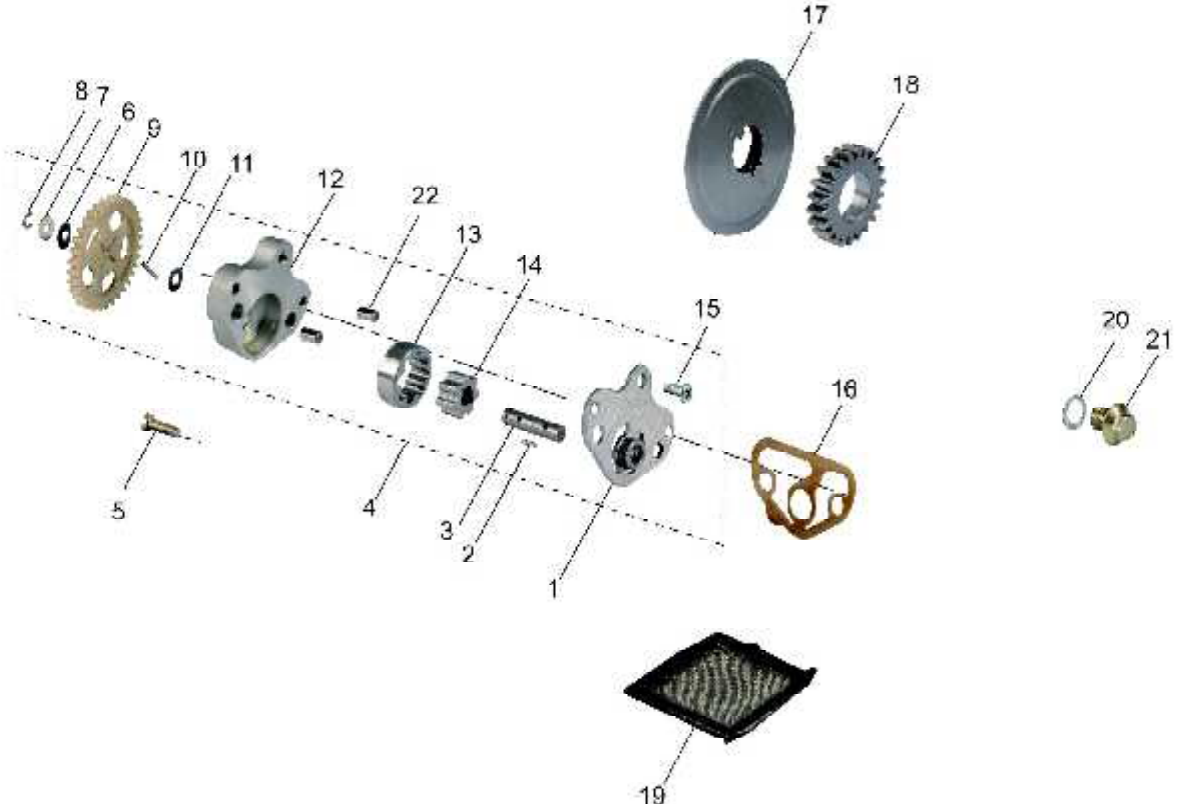
17
18
8
7
6
9
10
11
12
22
13
14
15
20
21
16
5
4
3
2
1
19

Nº	DESCRIPCION / DESCRIPTION	125	Cant.
1	PUMP SEAL COMBINATION	F28-611000-0	1
2	DRIVE PIN 1	F28-610003-0	1
3	AXIS	F28-610001-0	1
4	OIL PUMP	F28-610000-0	1
5	SCREW	ZA1-600850-0	2
6	CONICAL SPRING WASHER	ZA1-610402-0	1
7	WASHER	F28-610401-0	1
8	E-SHAPED OPENING RING	BQ/JRYP98-5-08	1
9	OIL PUMP GEAR	F28-610601-0	1
10	DRIVE PIN 2	F28-610004-0	1
11	FLAT WASHER	ZA1-610401-0	1
12	PUMP BODY	F28-610201-0	1
13	OUTER ROTOR	F28-612752-0	1
14	INNER ROTOR	F28-612751-0	1
15	SCREW	BQ/JRYP81M51002	1
16	OIL PUMP GASKET	ZA1-600801-0	1
17	OIL FINE FILTER	F28-630000-0	1
18	OIL PUMP DRIVE GEAR	F28-600751-0	2
19	CRUDE OIL FILTER	ZA1-620000-0	1
20	GASKET	ZA1-600401-0	1
21	OIL DRAIN BOLT	ZA1-600851-0	1
22	PIN	F28-610002-0	2

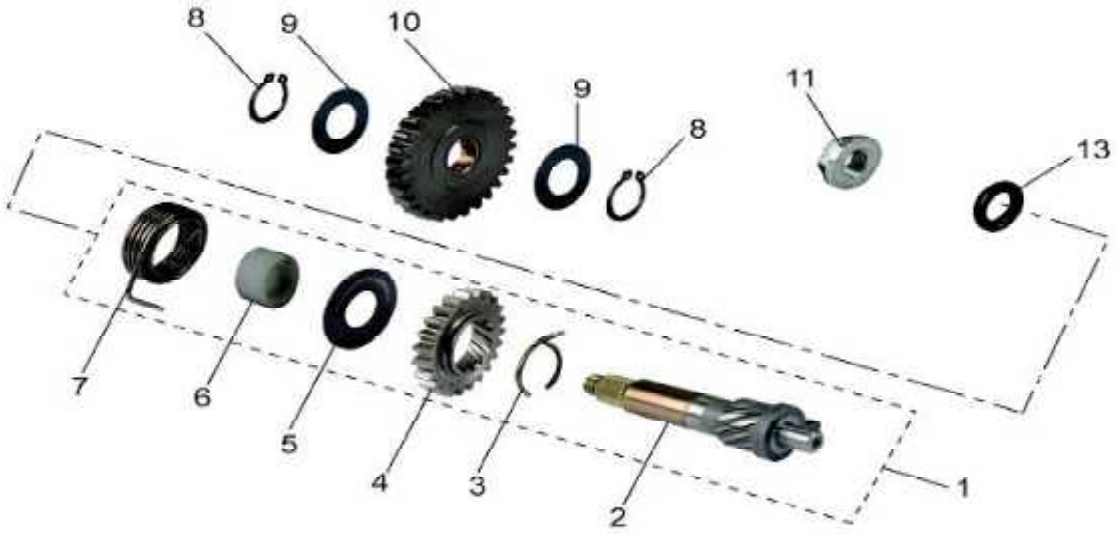
8
9
10
9
8
11
13
7
6
5
4
3
2
1

Nº	DESCRIPCION / DESCRIPTION				125	Cant.
1	RECOIL STARTER				F28-810000-0	1
2	KICK START SHAFT COMBINATION				F28-811000-0	1
3	WIRE CLIP				F28-810702-0	1
4	RECOIL STARTER GEAR				F28-810301-0	1
5	FLAT WASHER				F28-810401-0	1
6	SLEEVE				F28-810501-0	1
7	TORSION SPRING				F28-810701-0	1
8	CIRCLIP				ZA1-520402-0	2
9	WASHER				F28-800401-0	2
10	RECOIL START OFF ROUND OF THE COMBINATION				F28-802000-0	1
11	NUT				ZA1-400850-0\C6	1
13	OIL SEAL				F28-801000-0	1

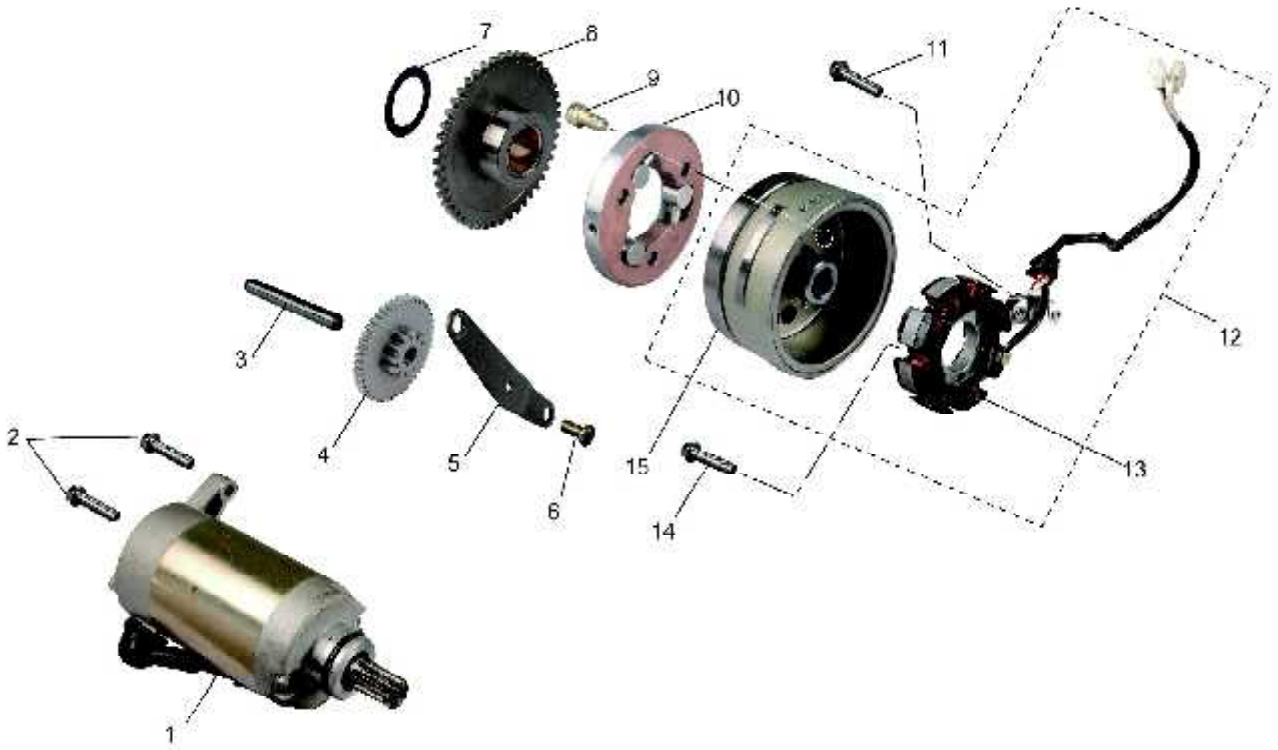
7
8
9
10
11
12
3
4
5
6
2
15
13
14
1

Nº	DESCRIPCION / DESCRIPTION	125	Cant.
1	STARTING MOTOR	F28-D60000-0	1
2	BOLT	BQ/JRYP80M62526	2
3	THROUGH AXLE	F28-800001-0	1
4	DOUBLE ROUND OVER	F28-800751-0	1
5	THROUGH ROUND PLATE	F28-800402-0	1
6	SCREW	BGB/T823-M61202	2
7	WASHER	FG-800402-0	1
8	ELECTRIC START LARGE GEAR ASSY	F28-840000-0	1
9	SCREW	BGB/T70.1M81652	3
10	ELECTRIC STARTER CLUTCH	FG-830000-0	1
11	SCREW	BGB/T70.1M61452	2
12	MAGNETO	F28-D52000-0	1
13	MAGNETIC MOTOR	F28-D51000-0	1
14	SCREW	BGB/T70.1M62552	3
15	MAGNETO ROTOR	F28-D52000-0	1

GASGAS

2013

TX-RANDONNE

125

DESPIECE / / PART LIST

TECHNOLOGY
&
MOTION
GASGAS
OCTUBRE / OCTOBER / OCTOBRE / OTTOBRE / OKTOBER 2012

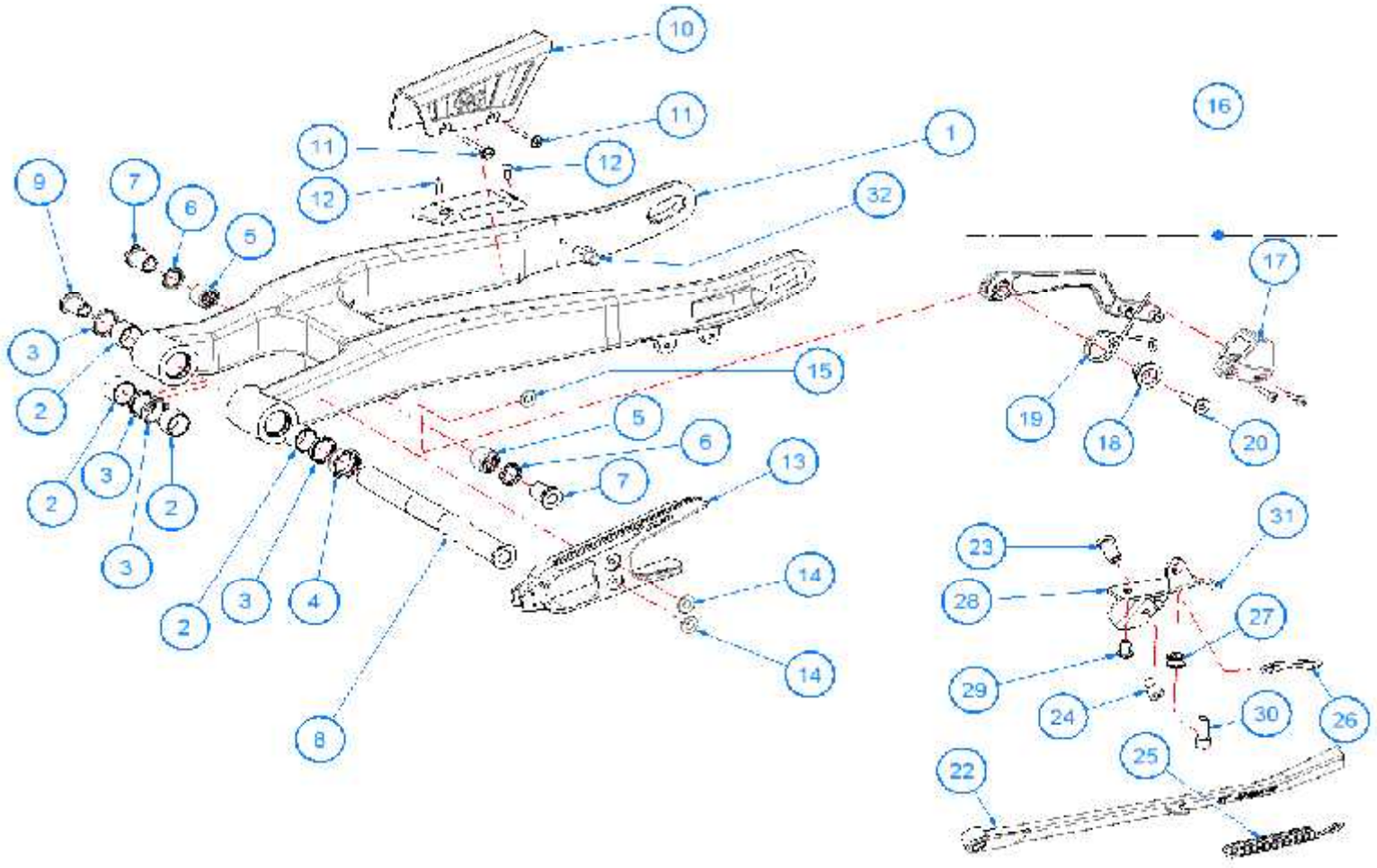
10
11
11
12
12
1
32
16
17
9
7
6
5
3
2
15
5
6
7
13
19
18
20
2
3
2
3
2
3
4
14
14
8
23
31
28
27
29
24
30
26
25
22

Nº	DESCRIPCION / DESCRIPTION		125	Cant.
1	BASCULANTE NEGRO TRIAL RAGA 2009		BT40000R3009	1
2	GLACIER PG20x23x15 F BASCULANTE		BT280212032	4
3	RETEN 20-26-4 870 N BASC.		C220001	4
4	CASQUILLO GUIA EJE BASCULANTE TRIAL 2002		BT280212108	1
5	COJINETE AGUJAS 15BM2116		BT27714009	2
6	RETEN 15-21-3-8170N BASC.BAL.		C230000	2
7	CASQ.BALANCIN 99		BT27914014	2
8	EJE BASCULANTE ANODIZADO TRIAL 2004		BT44500R3009	1
9	TORNILLO EJE BASCULANTE TRIAL 280-2002		BT280212009	1
10	PROTECTOR CADENA TRIAL PRO 2004		BT280428011	1
11	TORNILLO ROSCA CHAPA CON ARANDELA 4.8x38 NEGRO		T0614838	2
12	ULS 5X12 FARO,BOM.AG.		T0505012	2
13	PATIN CADENA TRIAL PRO 2004		BT280412015	1
14	REMACHE ALUMINIO 5x20 C/ANCHA		T4505020	2
15	ARANDELA DE 8X16X1,5		T4008016	1
16	CTO. TENSOR CADENA TRIAL RAGA 2009		BT42000RCT3009	1
17	GOMA TENSOR CADENA		BT42010RA3010	1
18	CASQUILLO TENSOR CADENA		B560000	1
19	MUELLE TENSOR CADENA		M122000	1
20	ALLEN CON.8X30 TENS.CAD.		T0408030	1
22	CABALLETE TRIAL PRO 2007		BT280712010	1
23	CASQUILLO GUIA CABALLETE TRIAL		BT27712011	1
24	ALLEN 8x14		T0308014	1
25	MUELLE CABALLETE TRIAL HOMOL.		BT280310039H	1
26	EXCENTRICA CABALLETE TRIAL HOMOL.		BT280312025H	1
27	DISTANCIADOR GOMA DEPOSITO ENDURO 2007		BE250714036	1
28	SOPORTE CABALLETE NEGRO TRIAL RAGA 2009		BT14210R3009	1
29	ULS 8X16		T0508016	1
30	ALLEN 8X20		T0308020	1
31	ALLEN CONICO 6X16 INOX.		T0406016I	1
32	TORNILLO GUIA PINZA FRENO TRAS. TRIAL 2002		BT280222049	1

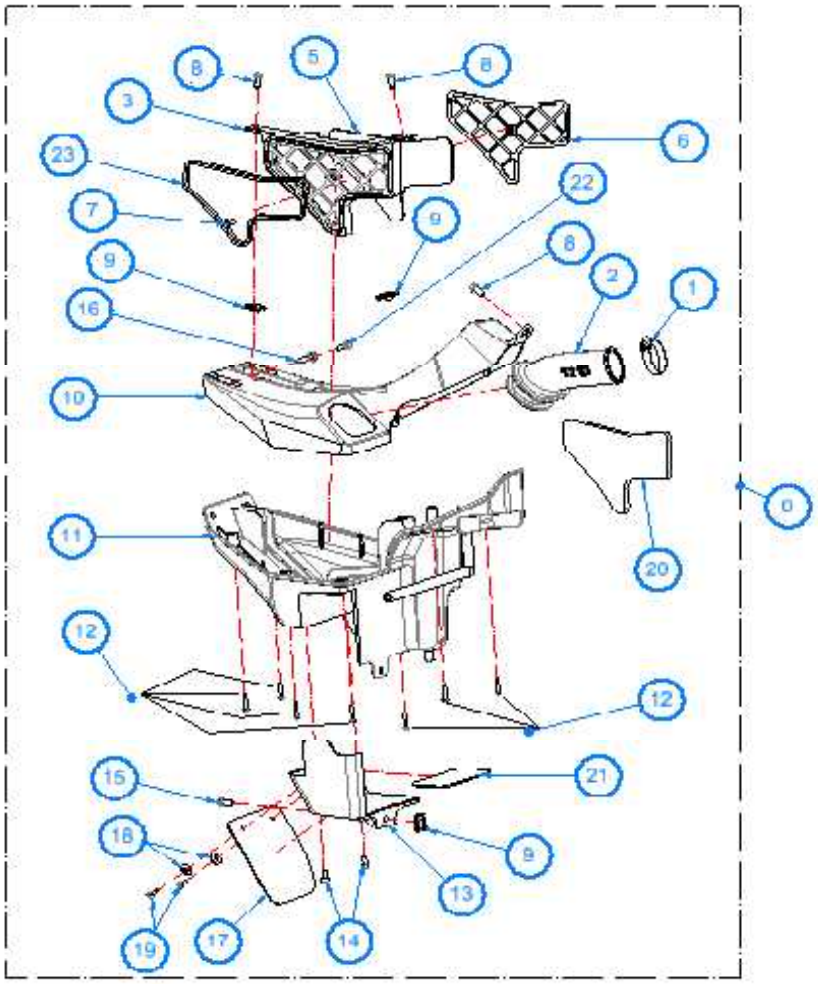
8
5
8
3
6
23
22
7
9
8
9
2
1
16
10
0
11
20
12
12
15
21
18
9
13
19
17
14

Nº	DESCRIPCION / DESCRIPTION		125	Cant.
0	CTO. CAJA DE FILTRO		BPS79000CT1211	1
1	ABRA.30-45/9 W2 CARBURADOR KEIHIN CEX (TOBERA)		B640005	1
2	TOBERA CAJA FILTRO		BPS792001211	1
3	CARCASA FILTRO AIRE		BPS795151211	1
4	TUBO SILICONA SELLADO CARCASA FILTRO		BPS795301211	1
5	ESPUMA FILTRO DE AIRE		BPS78500CT1211	1
6	REJILLA FILTRO DE AIRE		BPS795101211	1
7	ALLEN CON.6X16		T0406016	1
8	TORNILLO ESPECIAL M6x20 FIL.20 ROND. D.15 8.8 ZINC.B		T0606020	3
9	TUERCA NUT 956 RAPIDA M-6 62128278		T2606000	3
10	TAPA SUPERIOR CAJA FILTRO		BPS790501211	1
11	CTO. BASE CAJA FILTRO		BPS790401211	1
12	TORN.ROSCA PLASTICO 3.6X20 CABOTA PLANO CELO		T0803020	7
13	TAPA LATERAL CAJA FILTRO		BPS790701211	1
14	TORNILLO ROSCA PLASTICO DIAM 6x20 DELTATONE		TS36060202702	2
15	EXAGONAL 6x14 CON ARANDELA INCORP.		T0206014	1
16	TORNILLO ESPECIAL 6x20 8.8 ZINCADO		T0206020	1
17	GOMA PROTECCIÓN CAJA FILTRO - PASO DE RUEDA		BPS795401211	1
18	ARANDELA PLANA 5x15x1,5		T4005015	2
19	TORN. ESPECIAL PLAST 4.6X12 CL89Z CELO ZINTEC Gris		T0804612	2
20	PROTECCION TERMICA CAJA DE FILTRO		BPS795501211	1
21	PROTECCION 100X50X2		BT950011211	1
22	TORNILLO ESPECIAL 6X16 8.8 ZINCADO		T0206016	1
23	ESPUMA CARCASA FILTRO DE AIRE RANDONNE 2013		BRS790451213	1

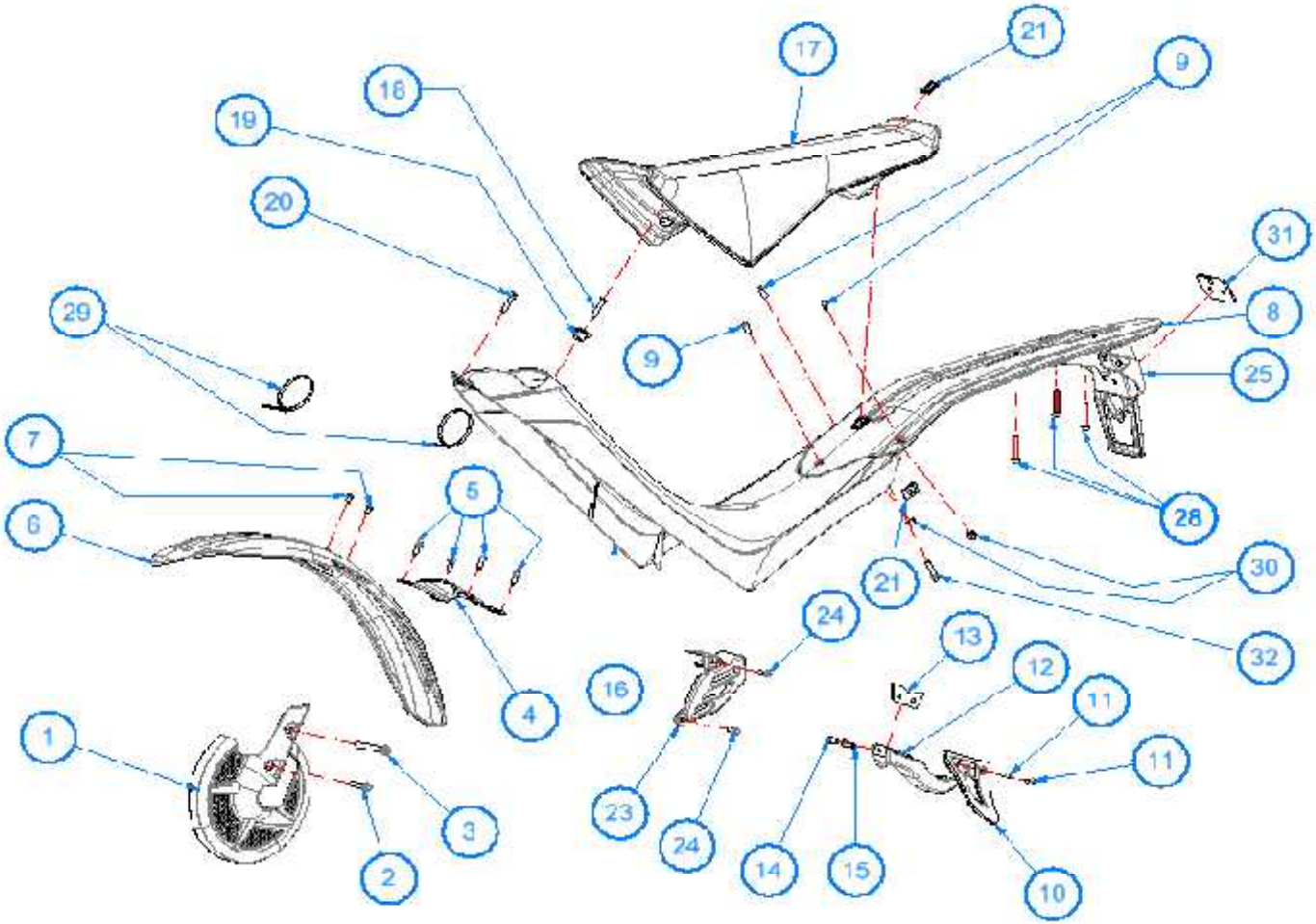
17
21
9
18
19
20
31
8
29
9
25
7
5
28
6
30
21
24
13
32
12
16
11
4
1
11
3
23
24
14
15
2
10

Nº	DESCRIPCION / DESCRIPTION			125	Cant.
1	PROTECTOR DISCO DEL. NEGRO TRIAL RAGA 2009			BT94100RB3009	1
2	TORNILLO PINZA FRENO DEL.INF 8x1.25x36.5			BT280022071	1
3	TORNILLO PINZA FRENO DEL.SUP. 8x1.25x62.5			BT280022070	1
4	PUENTE SUSPENSION TRIAL COLOR TITANIO RAGA 2009			BT21500R3009	1
5	EXAGONAL 6x14 CON ARANDELA INCORP			T0206014	4
6	GUARDABARROS DEL. RAGA 2009			BT91000RB3009	1
7	ULS 5X8 PUEN.GUARD			T0505008	2
8	GUARDABARROS TRASERO		BRS935011213CT	BRS93500CT1213	1
9	ULS 6X15			T0506015	3
10	PROTECTOR CORONA TXT RAGA 2011			BT57350RA3011	1
11	ULS 5X12 FARO,BOM.AG			T0505012	2
12	PROTECTOR DISCO TRAS. NEGRO TRIAL RAGA 2009			BT57050R3009	1
13	SOPORTE PROTECTOR DISCO FRENO TRAS A PINZA			BT280222051	1
14	ULS 6X12 TOPE FREN,PRO.FIL,CEX			T0506012	1
15	ULS 6X20 ZINCADO			T0506020	1
16	CUBIERTA DEP.COMBUSTIBLE BLANCA RANDONNE 2013			BRS760301213CT	1
17	CTO. ASIENTO			BPS940001211	1
18	TORNILLO ALLEN DIN 7991 CON. 6X30			T0406030	1
19	CASQUILLO DEL FIJA ASIENTO			BPS940801211	1
20	TORNILLO DESVAPORIZADOR DEP.GASOLINA RAGA 2012			BT80000033012	1
21	TUERCA NUT 956 RAPIDA M-6 62128278			T2606000	2
22	ADHESIVO GUARDABARROS DELANTERO			BRS950051213	1
23	PROTECTOR PIÑON SALIDA PAMPERA 125 4T 2011			BPS486001211	1
24	TORNILLO ESPECIAL 6X16 8.8 ZINCADO			T0206016	2
25	PORTAMATRICULA TRIAL 2005			BT280520003	1
28	TORN.ROSCA PLASTICO 3.6X20 CABOTA PLANO CELO			T0803020	3
30	TUERCA AUTOBL. M-6 ALTA			T2106002	2
31	ESPUMA PILOTO TRASERO ENDURO			BE250234058	1
32	TORNILLO ESPECIAL 6X25 VALONA 11MM			T0206025	1

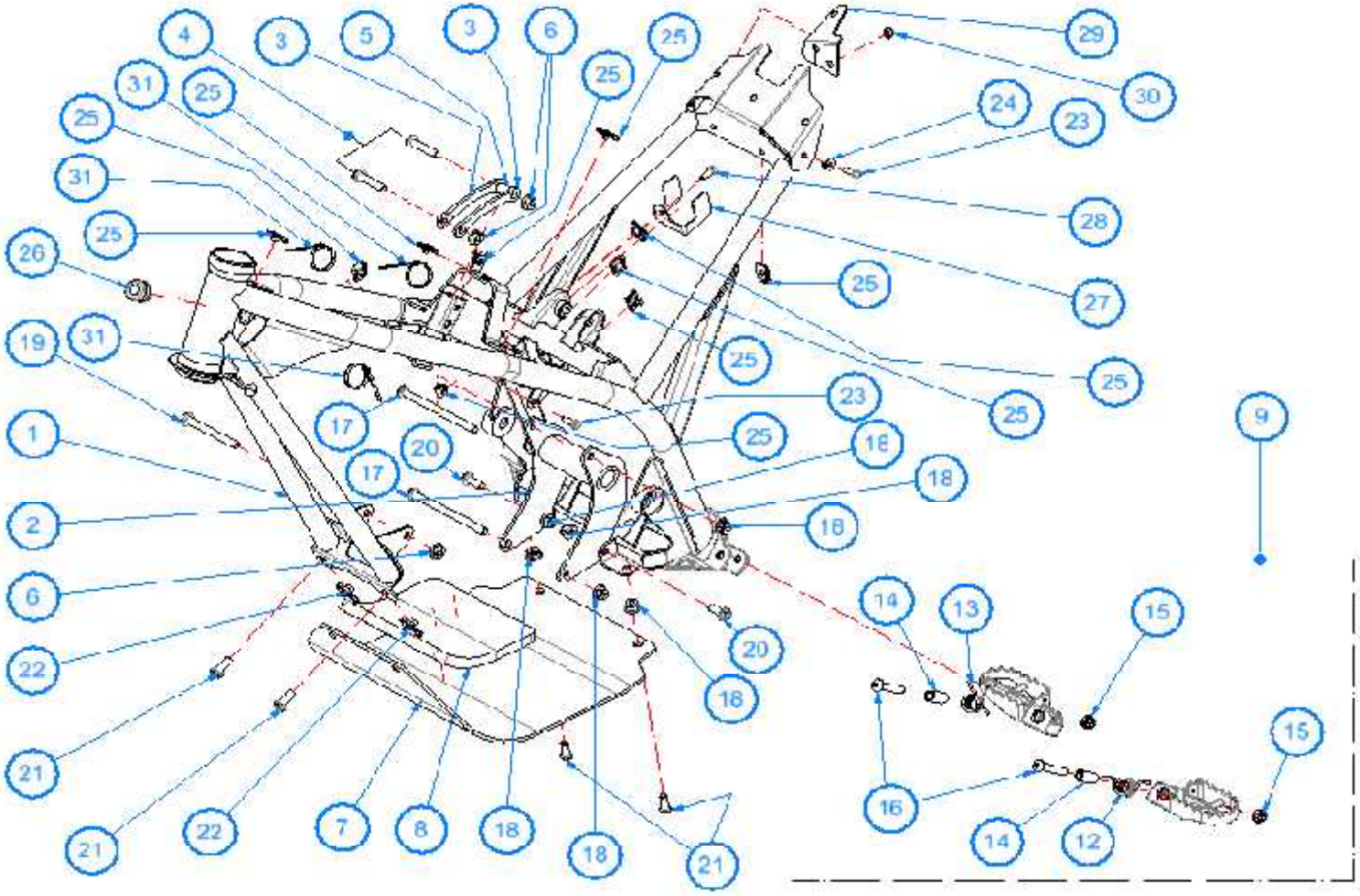
4
3
5
3
6
25
25
29
30
31
25
24
23
25
31
28
25
26
25
27
19
31
25
25
23
25
9
1
17
20
25
18
17
18
2
18
6
14
13
15
22
20
18
15
21
16
21
22
7
8
18
18
21
14
12

Nº	DESCRIPCION / DESCRIPTION		125	Cant.
1	CHASIS NEGRO RANDONNE 125 4T		BRS100001213	1
2	SOPORTE MOTOR RANDONNE POLICE NEGRO		BRS110001213	1
3	TIRANTE CHASIS A CULATA PAMPERA 2011		BPS112001211	2
4	TORN. EXAGONAL CON ARAND 8X35		T0208035	2
5	CASQUILLO FIJA TIRANTES CULATA A CHASIS		BPS112101211	1
6	TUERCA CON ARAN.ESTRIADA M-8 ZINCADA		T2208001	3
7	PROTECTOR CARTER MOTOR PAMPERA 125 4T 2011		BPS115001211	1
8	GOMA PROTECTOR CARTER RANDONNE 125 2012		BT10000021212	1
9	CTO. ESTRIBOS TRIAL 2008		BT14000CT2808	1
12	MUELLE ESTRIBO IZDA.		M100004	1
13	MUELLE ESTRIBO DCHA.		M100003	1
14	CASQ.ESTRIBO TRIAL-99		BT27910006	2
15	TUERCA AUTOBL. M-8 BAJA (DIN 985)=T2108001/2		T2108001	2
16	ULS M8X45 DRACOMET		T0508045	2
17	TORNILLO ESPECIAL M8x103		T0208103	2
18	TUERCA AUTOBLOCANT M8 CON ARANDELA		T2208002	6
19	TORNILLO ESPECIAL 8X70 FIL.20 12.9 ZINCADO		T0208070	1
20	TORNILLO ESPECIAL 8x20 8.8 ZINCADO		T0208020	2
21	ULS 8X20 PLAT,PROT		T0508020	4
22	TUERCA NUT ENJAULADA M-8 TRU 958 TRIAL 2000		BT280010041	2
23	TORNILLO ESPECIAL 6X16 8.8 ZINCADO		T0206016	2
24	TUERCA AUTOBLOC. DIN-6926 M-6 C/ARAND ZN		T2206002	1
25	TUERCA NUT 956 RAPIDA M-6 62128278		T2606000	10
26	SILENBLOCK SILENCIADOR EC-2000 (FIJA DEL DEP GAS)		BE250026005	1
27	SOPORTE RELE ARRANQUE PAMPERA 2011		BPS109051211	1
28	EXAGONAL 6x14 CON ARANDELA INCORP.		T0206014	1
29	GOMA PASACABLES GUARDABARROS TRAS.		BPS190601211	1
30	TUERCA AUTOBL. M-6 ALTA		T2106002	1
31	BRIDA UNEX 2244 4.8X20		BE25634009	3

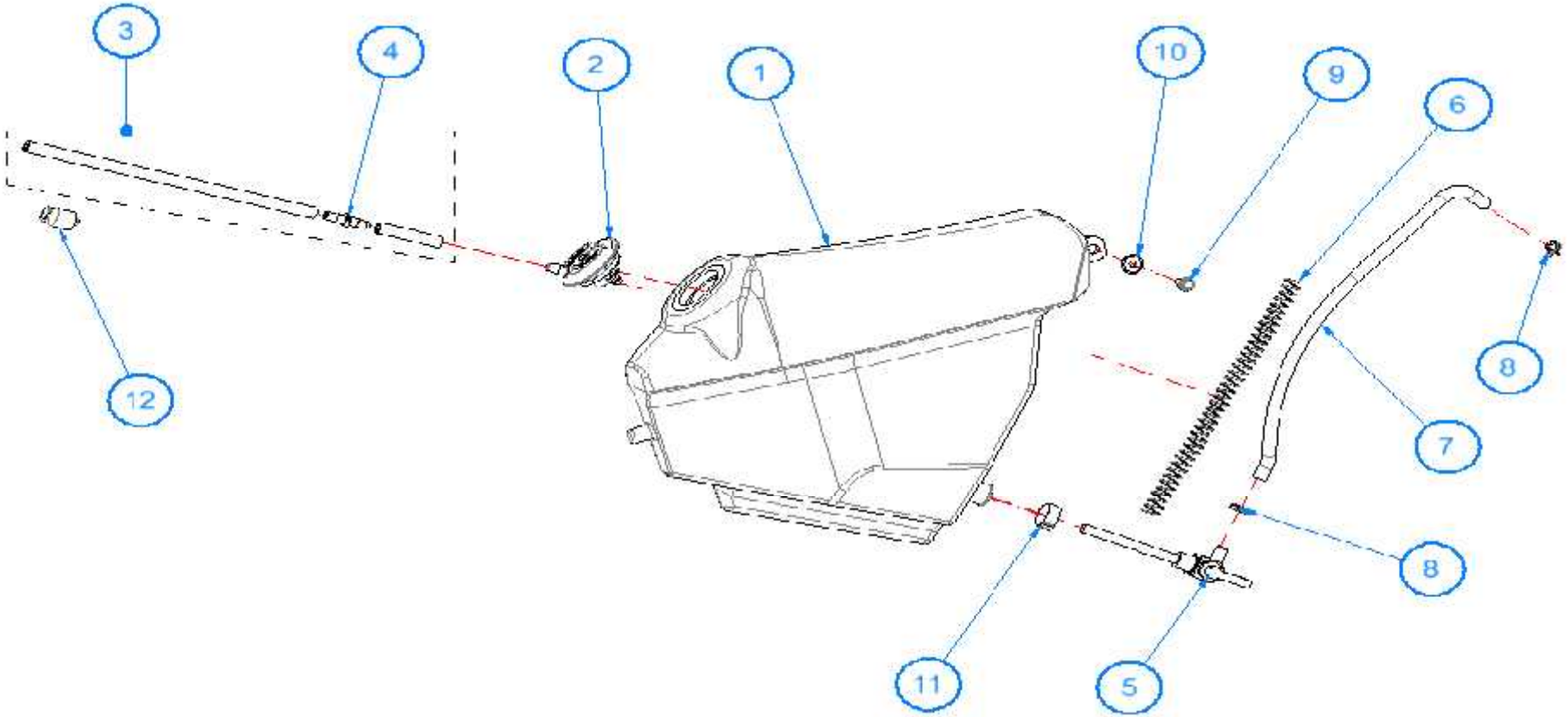
3
4
2
1
10
9
6
12
8
7
8
11
5

Nº	DESCRIPCION / DESCRIPTION		125	Cant.
1	DEPOSITO GASOLINA RANDONE		BPS760001211	1
2	CTO.TAPON GASOLINA TRIAL 2004		BT280420010	1
3	CTO.TUBO DESVAPORIZADOR GASOLINA RAGA 2012		BT80000073012	1
4	VALVULA DESVAPORIZADOR		BT27836025	1
5	GRIFO GASOLINA 01Z3042173		BIT50010031	1
6	MUELLE DESVAPORIZADOR		M150000	1
7	TUBO DE GASOLINA		BPS780051211	1
8	ABRAZ.ELASTICA ALAMBRE 9.3X9.9 2016055		L200036	2
9	EXAGONAL 6x14 CON ARANDELA INCORP.		T0206014	1
10	CASQUILLO TAPA RADIADOR ALUMINIO		BE250032060	1
11	ABRAZADERA COBRA D.17		BIT50010033	1
12	SOP. TUBO DESVAP.00-23 NEGRO		BE250420076	1

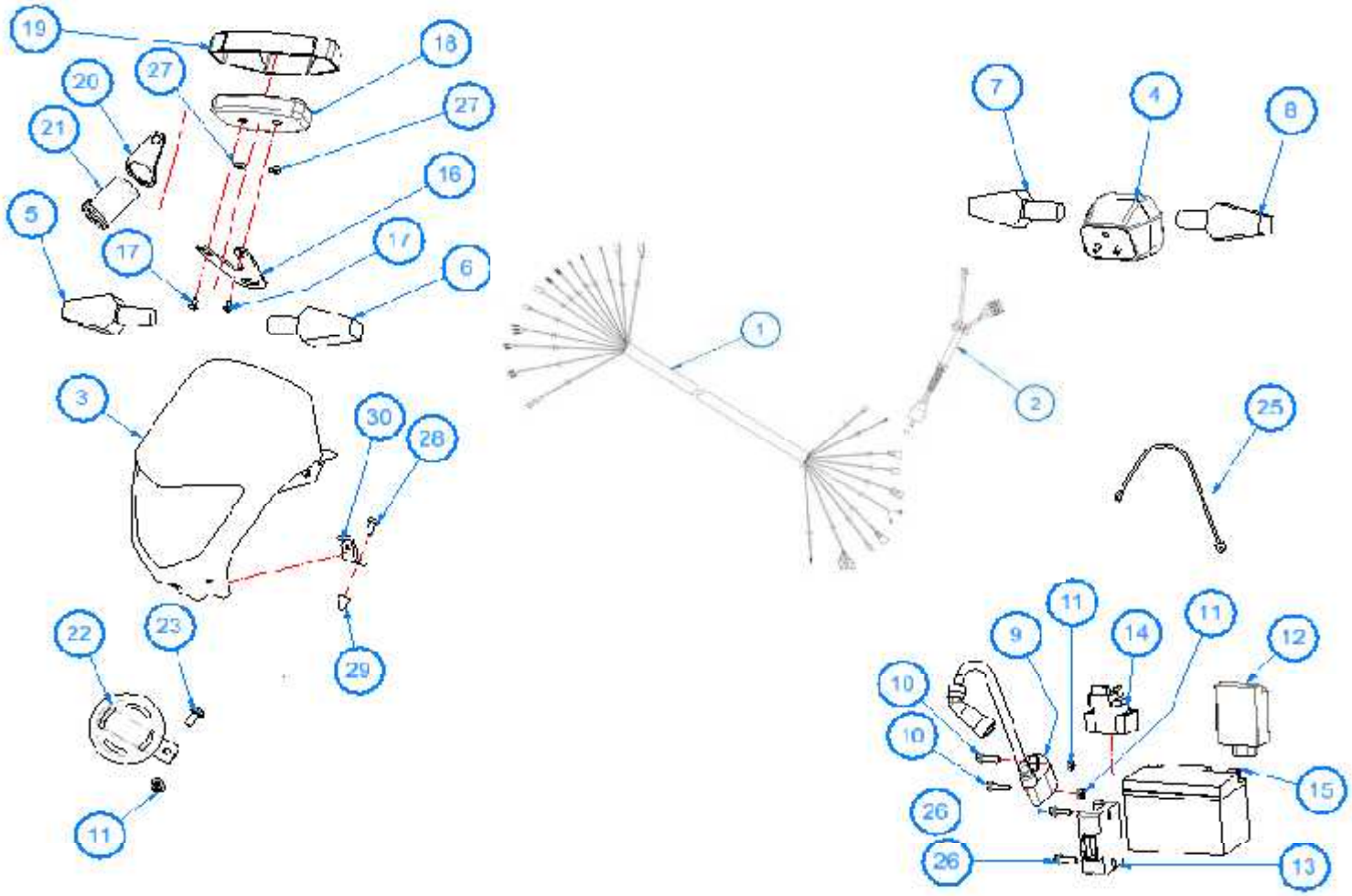
19
20
27
21
18
27
16
5
17
17
6
3
30
28
22
23
29
11
1
2
7
4
8
25
11
9
14
11
12
10
10
15
26
26
13

Nº	DESCRIPCION / DESCRIPTION		125	Cant.
1	INSTALACION ELECTRICA PRINCIPAL RANDONNE 2013		ERS100001213	1
2	INST ALARGO PILOTO TRASERO TRIAL PRO HOMOL 06		BT280634016	1
3	CTO.FARO RANDONNE HOMOLOGADO		BPS905001212	1
4	FARO PILOTO PP 250-97 277.10		BP25734015	1
5	INTERMITENTE DRCH. 2006 ref.911106		BT280634018/2	1
6	INTERMITENTE IZQ. 2006 ref.911107		BT280634019/2	1
7	INTERMITENTE DRCH. 2006 ref.911106		BT280634018/2	1
8	INTERMITENTE IZQ. 2006 ref.911107		BT280634019/2	1
9	BOBINA		EPS500001211	1
10	TORNILLO ESPECIAL 6x20 8.8 ZINCADO		T0206020	2
11	TUERCA CON ARAN.M-6 (DIN 6923) ESTRIADA		T2206000	3
12	CDI		EPS511001211	1
13	REGULADOR RECTIFICADOR		EPS512001211	1
14	RELE DE ARRANQUE		EPS802501211	1
15	BATERIA		BPS400001211	1
16	SOPORTE MULTIFUNCION TRIAL PRO 2006		BT280634045	1
17	ULS 4X10 CON ARANDELA NEGRO		T0554010N	2
18	MULTIFUNCION TRIAL PRO 2008		ET600002808	1
19	CTO. TESTIGOS LUCES HALLEY 125 4T 2009		EH600501209	1
20	SOPORTE CLAUSOR LLAVE ENCENDIDO		BRS241001213	1
21	CERRADURA CONTACTO CON CIERRE FSE450-2003		BFS450334032	1
22	CLAXON FSR 450-2008		EFS204004508	1
23	ULS 6x10 CON ARANDELA INCOR.NEGRO		T0556014	1
24	BRIDA UNEX 2244 16/102 4.8X36		BE25634007	1
25	CABLE BATERIA A RELE ARRANQUE		EPS401101211	1
26	ALLEN 6X20 12.9		T0306020	2
27	ARAND. GOMA MULTIFUNCION END 2008 NBR 4X10X3		EE650102508	2
28	ULS 5X12 FARO,BOM.AG.		T0505012	1
29	CASQUILLO GOMA CON BOLONA		BT90000073011	1
30	SOPORTE PORTAFARO HOMOL. RANDONNE 2013		ET20000013012	1

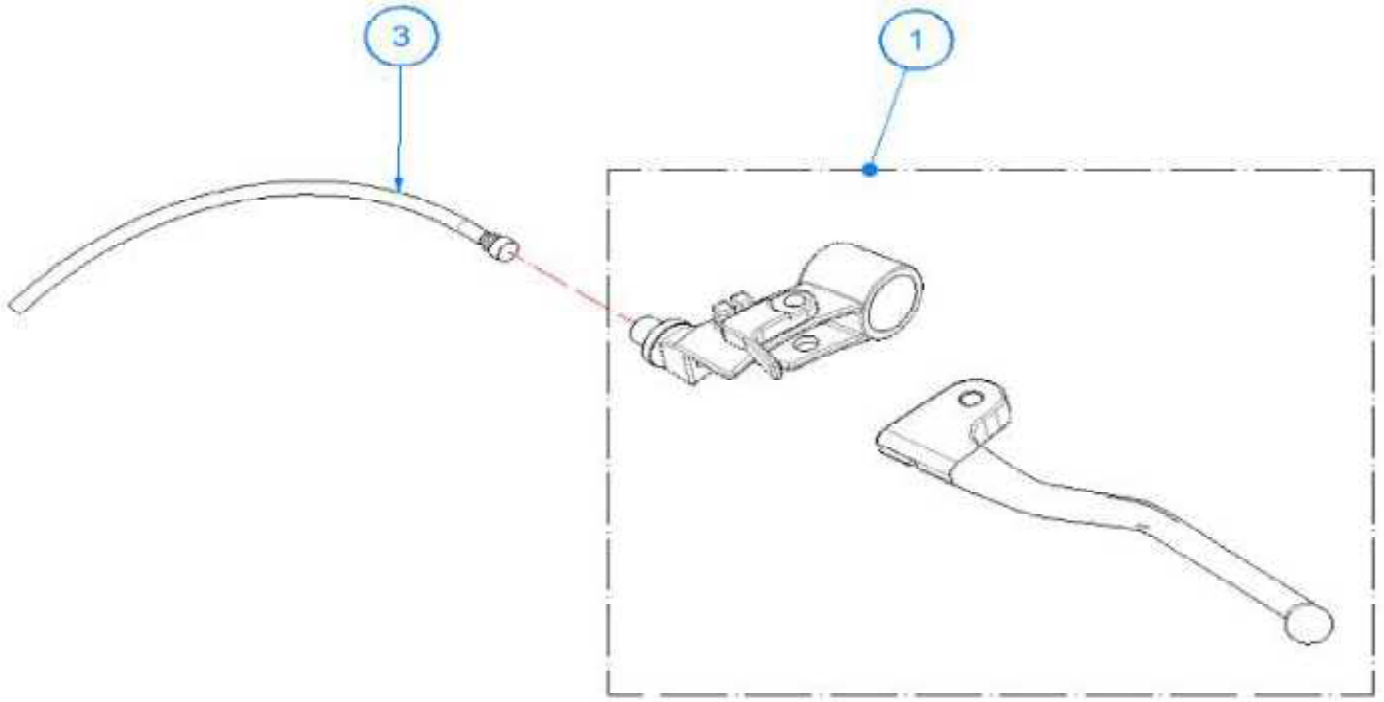
3
1

Nº	DESCRIPCION / DESCRIPTION		125	Cant.
1	CTO.MANETA EMBRAGUE CON LEVA STARTER PAMPERA 125 4T		BPS46300CT1211	1
3	CABLE DE EMBRAGUE		BPS471001211	1

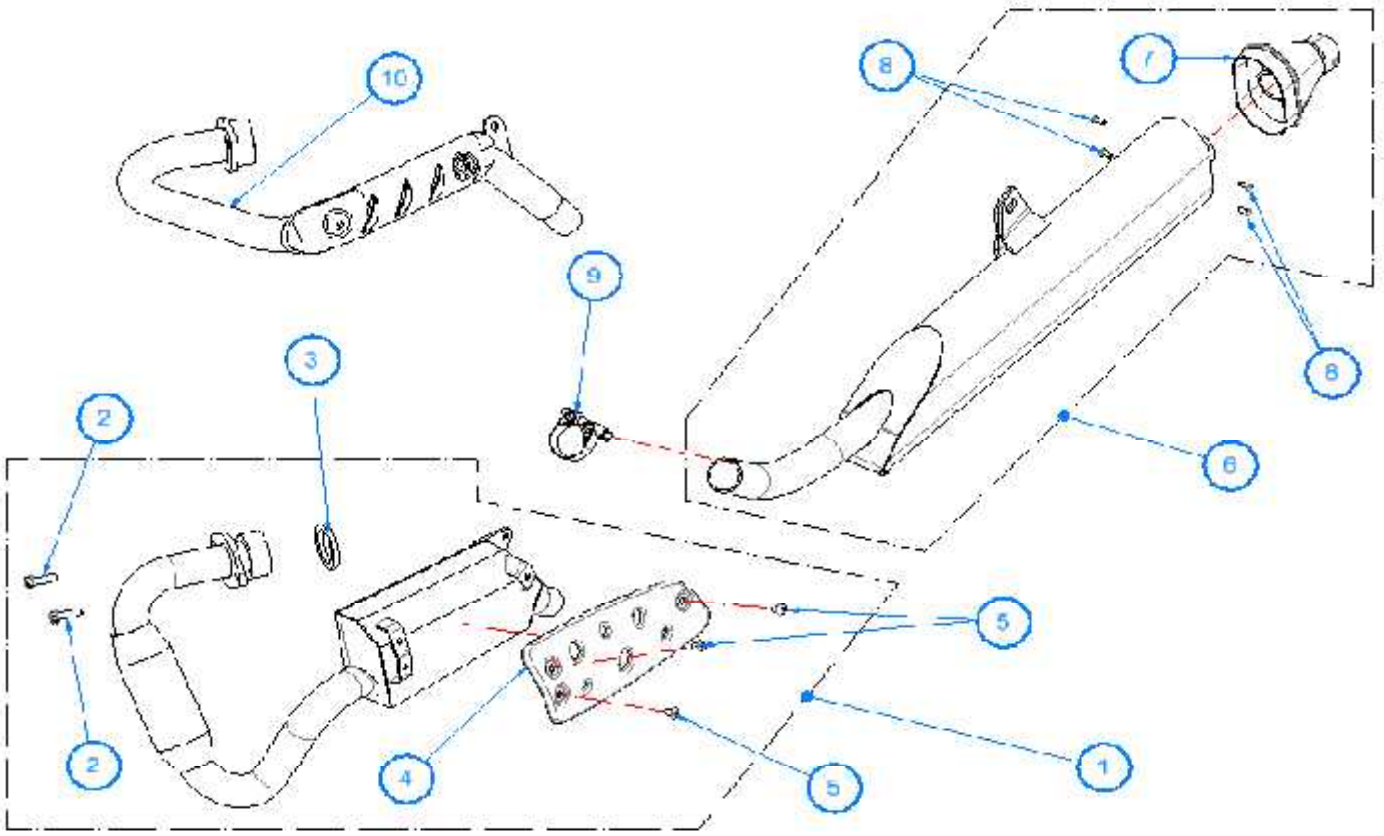
10
8
7
9
3
2
8
6
5
2
4
5
1

Nº	DESCRIPCION / DESCRIPTION	125	Cant.
0	CONJUNTO TUBO DE ESCAPE	BPS85000CT1211	1
1	CTO. CURVA DE ESCAPE Y SILENCIOSO INTERMEDIO	BPS850001211	1
2	TORNILLO ESPECIAL 6x20 8.8 ZINCADO	T0206020	2
3	JUNTA TUBO DE ESCAPE	BPS862151211	1
4	PROTECTOR SILENCIOSO INTERMEDIO	BPS860011211	1
5	TORNILLO FIJA PROTECTOR SILENCIOSO INTERM.	T050508	3
6	CTO. SILENCIOSO FINAL	BPS870001211	1
7	CAZOLETA FINAL SILENCIOSO	BPS870901211	1
8	REMACHE ALUMINIO 4x12 CABOTA NEGRA	T4504012N	4
9	ABRAZADERA UNION SILENCIOSO INTERM. Y FINAL	BPS862101211	1
10	CURVA ESCAPE RANDONNE 125 4T 2012 RACING	BT85000011212	1

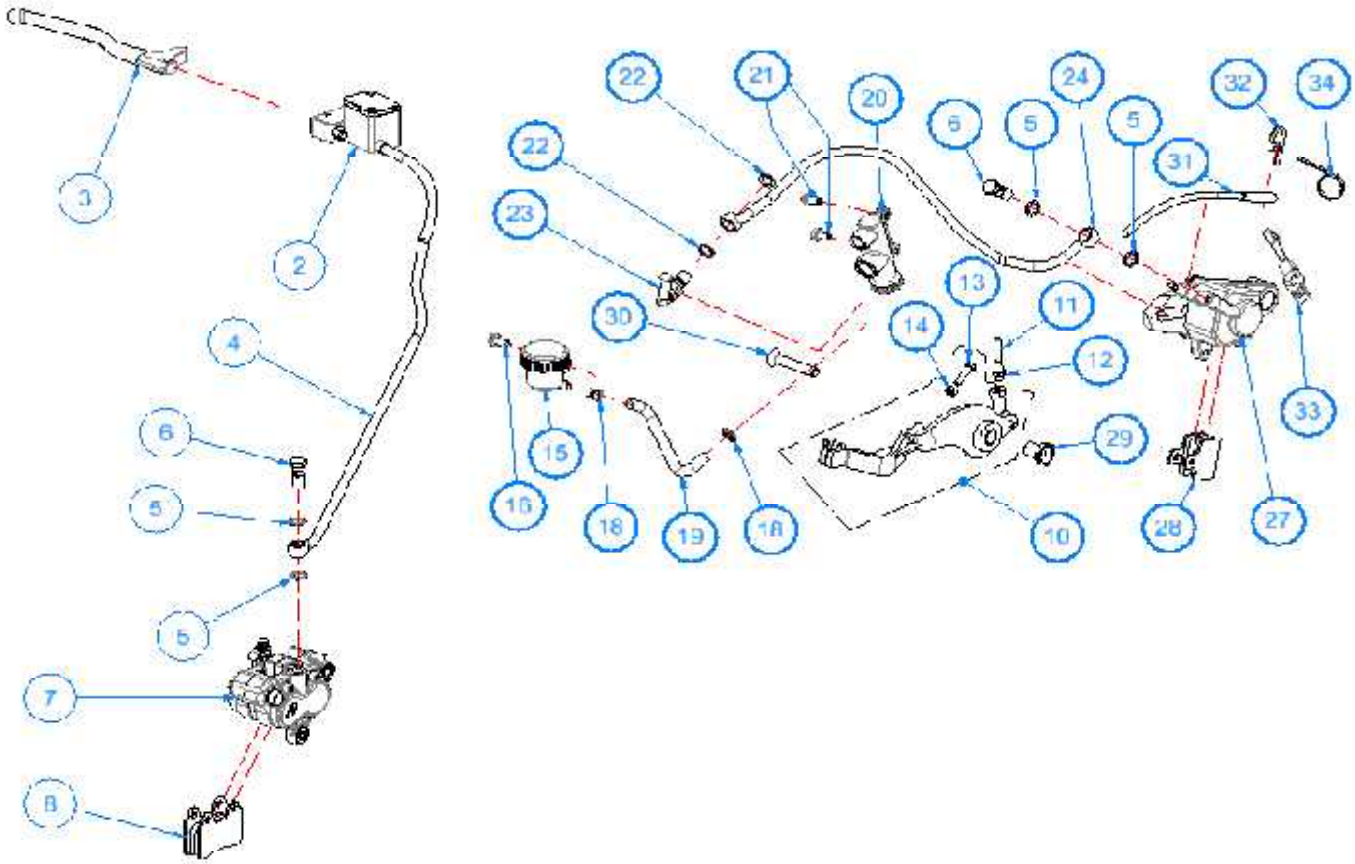
1
2
4
6
5
5
7
8
22
21
20
24
32
34
22
23
5
5
5
31
30
13
11
14
12
33
15
29
16
18
19
17
10
28
27

Nº	DESCRIPCION / DESCRIPTION		125	Cant.
2	CTO. BOMBA FRENO DELANTERO		BT61000R3009	1
3	MANETA FRENO DELANTERO		R390002PL	1
4	LATIGUILLO FRENO DELANTERO		BT280222002	1
5	ARANDELA 10X14X1.5 AL. (B220001AL)		BT280522007	2
6	RACOR LATIG. FRE. TRAS. M10X1 ALU-TITANIO		BT280522006	1
7	PINZA FRENO DELANTERO		BT280222000	1
8	JUEGO PASTILLAS FRENO DELANTERO		BT280222065	1
36	KIT TAPA BOMBA FRENO Y EMB.97		BT27722210	1
35	KIT BOMBA FRENO DEL.Y EMB.		BT27722208	1
10	CTO. PEDAL FRENO COMPLETO PAMPERA 125 4T		BPS13000CT1211	1
11	VARILLA PEDAL FRENO TRASERO LONG. 48		BT65000083012	1
12	TUERCA M-6 BAJA DIN 936		T2006001	1
13	EXAGONAL M5x15 ZINCADO		T0105015	1
14	TUERCA M-5		T2005000	1
15	DEPOSITO LIQUIDO FRENO GAS GAS TRIAL PRO 2004		BT280410016	1
16	EXAGONAL 6x14 CON ARANDELA INCORP.		T0206014	1
17	TUERCA M-6 (DIN 934)		T2006000	1
18	ABRAZ.ELASTICA ALAMBRE 9.3X9.9 2016055		L200036	2
19	TUBO DEPOSITO LIQUIDO FRENO		BPS663351211	1
20	BOMBA FRENO D 9.5 TRAS. 2002 129.00.002C		BT280222010	1
21	ULS 6X10 DIRECCION		T0506010	2
22	ARANDELA 10X14X1.5 AL. (B220001AL)		BT280522007	2
23	INTERRUPTOR STOP 23.011/3 TRIAL		BEP250234003	1
24	LATIGUILLO FRENO TRASERO TRIAL 2007		BT280722004	1
5	ARANDELA 10X14X1.5 AL. (B220001AL)		BT280522007	2
6	RACOR LATIG. FRE. TRAS. M10X1 ALU-TITANIO		BT280522006	1
27	PINZA 2P D25 TRASERA 223.00.102 TRIAL 2002		BT280222001	1

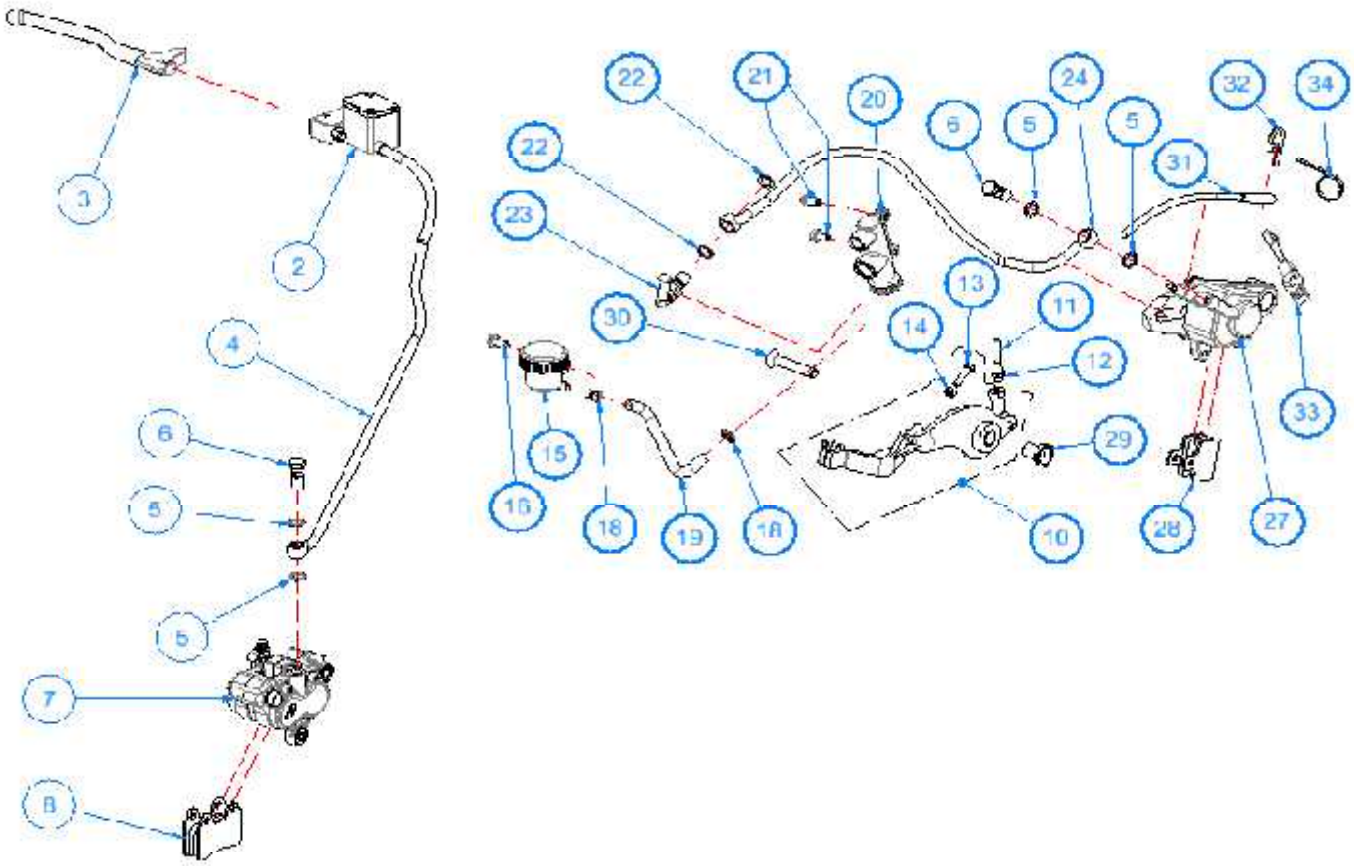
1
2
4
6
5
5
7
8
22
21
20
24
32
34
22
23
5
5
5
31
30
13
11
14
12
33
15
29
16
18
19
18
10
28
27

Nº	DESCRIPCION / DESCRIPTION		125	Cant.
27	PINZA 2P D25 TRASERA 223.00.102 TRIAL 2002		BT280222001	1
28	JUEGO PASTILLAS FRENO TRASERO		BT280222068	1
29	TORNILLO PEDAL DE FRENO TRASERO TRIAL PRO 2006		BT280610302	1
30	ALLEN CONICO 8X45		T0408045	1
31	SENSOR CUENTA KM. TRIAL PRO 2006		BT280634050	1
32	GRAPA SUJECION SENSOR CTA. KM. TRIAL 2006		BT280634053	1
33	ELASTICO SUJ.DEPOS.		BE25636000	1
34	BRIDA UNEX CORTA 2221-0 2.5X98 =P380003		BE25634010	1

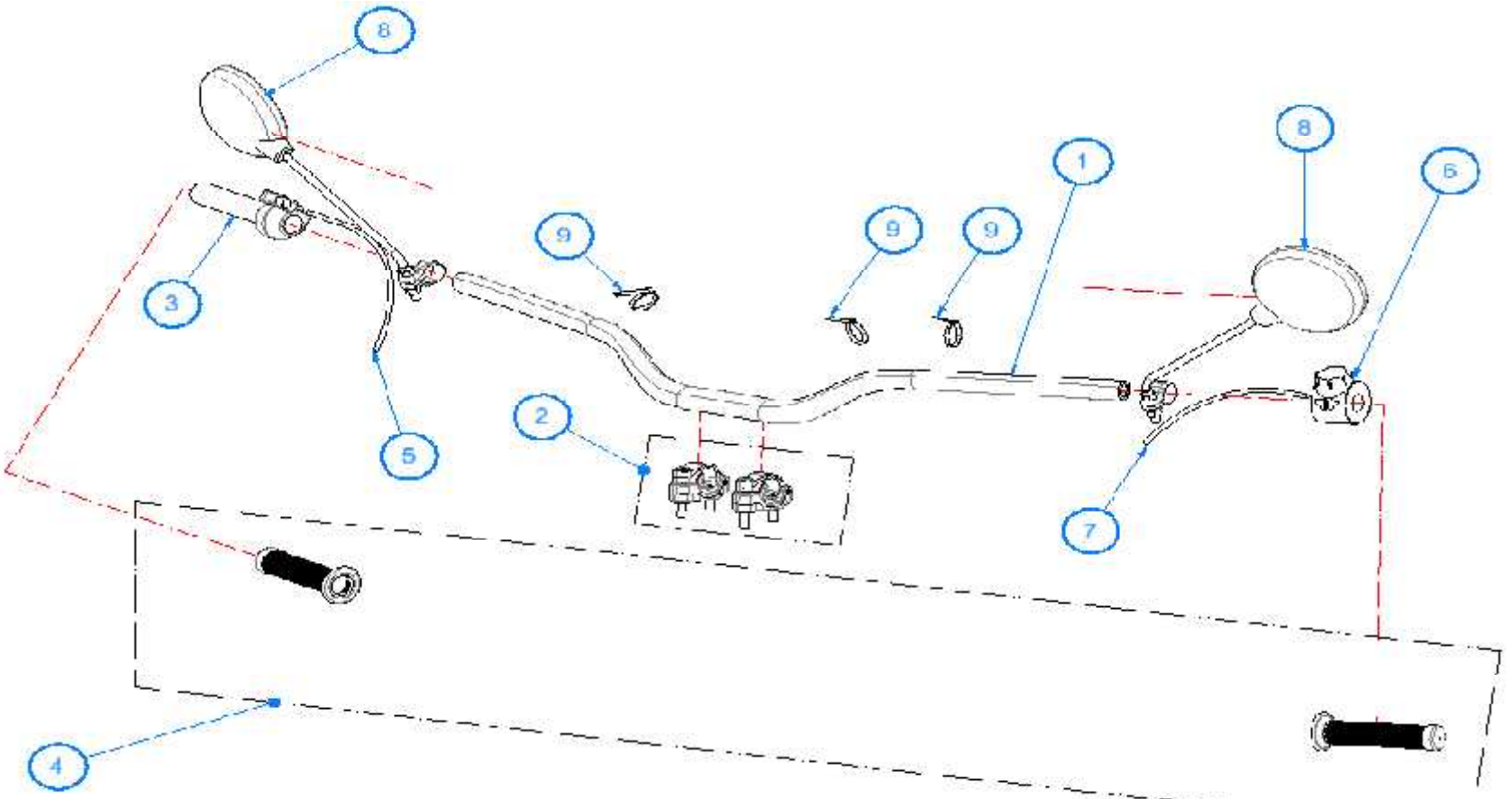
8
9
9
9
1
8
6
3
5
2
7
4

Nº	DESCRIPCION / DESCRIPTION			125	Cant.
1	MANILLAR			BPS250001211	1
2	CTO.BRIDA PRO RACING MANILLAR VARIABLE			BT280414012C	1
3	PUÑO MANDO GAS 1800-03			E100001	1
4	JUEGO EMPUÑADURAS TXT 2013			BT261003013	1
5	CABLE DE GAS 370-96 CEX			E160003	1
6	CONMUTADOR LUCES EC-2010 ARRAN.ELEC.			EE602002510	1
7	CABLE STARTER RANDONNE			BT75000001211	1
8	ESPEJO RETROVISOR CEX			L300760	2
9	BRIDA UNEX 2244 4.8X20			BE25634009	3

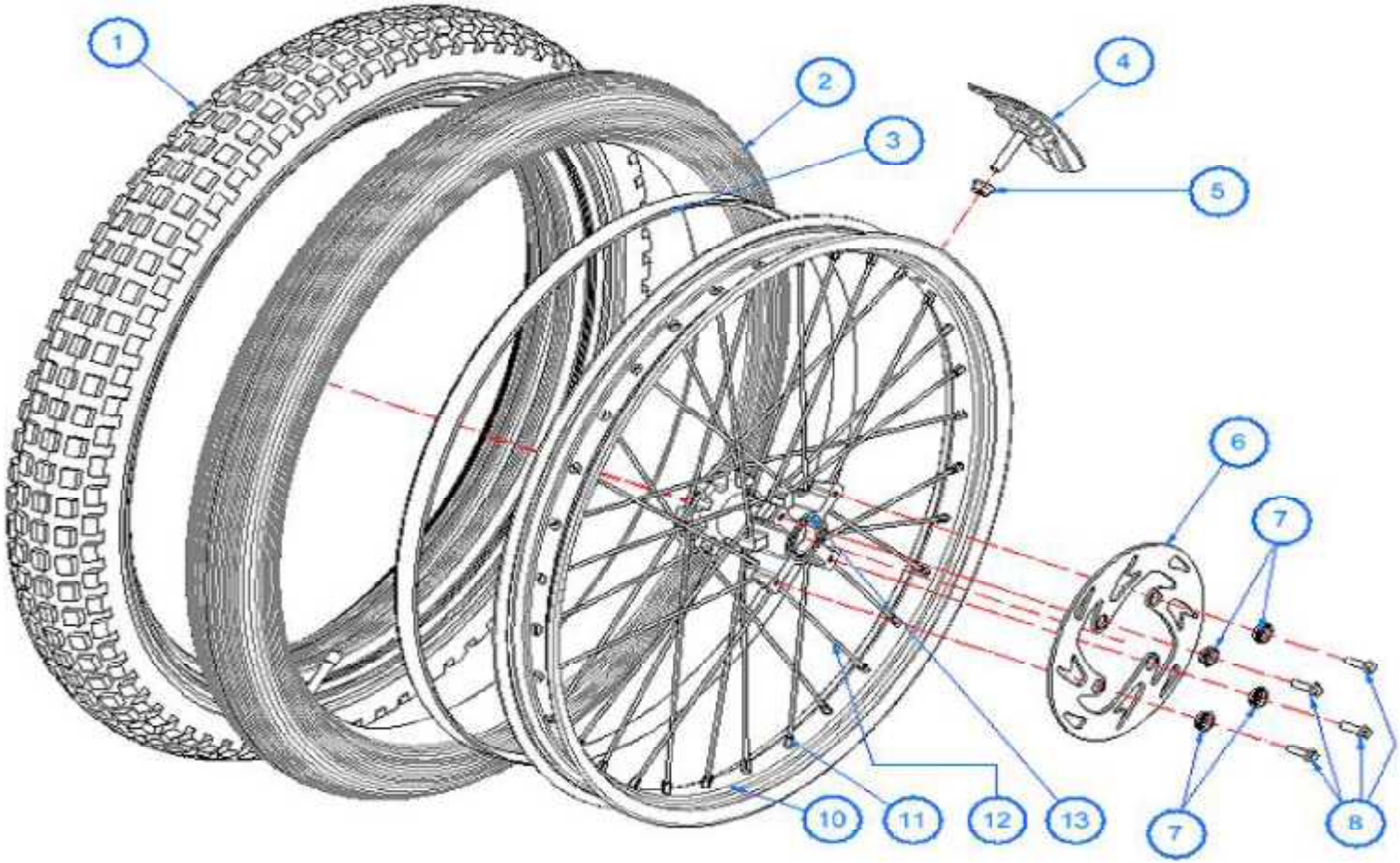
1
2
3
4
5
6
7
7
8
10
11
12
13

Nº	DESCRIPCION / DESCRIPTION		125	Cant.
1	NEUMATICO DEL.PAMPERA 125 4T 2011 MT43		BPS501001211	1
2	CAMARA DELANTERA 21V1-09-1 (PIRELLI)		BPS502001211	1
3	PROTECTOR BANDA DEL.FLAP 21		BE503002511	1
4	AGARRE CUBIERTA DEL. Nø1 TT-96 =R120000 HR9010101		BE25618027	1
5	TUERCA CON ARAN.ESTRIADA M-8 ZINCADA		T2208001	1
6	DISCO FRENO DELANTERO TRIAL 2003 FLOTANTE		BT280322011R	1
7	DISTANCIADOR 490.75.311 R FLOTANTE 99		BT27918019	4
8	TORNILLO ESPECIAL 6x20 8.8 ZINCADO		T0206020	4
9	CTO. RUEDA DELANTERA RANDONNE		BPS50000CT1211	1
10	LLANTA DELANTERA		BT540002810	1
11	TUERCA RADIOS 3mm. RUEDA DEL.DIA.6.5		BT27718001	32
12	RADIO 3x257 RUEDA DEL. TRIAL		BRT500118008	32
13	CUBO RUEDA DEL. TRIAL 32R EJE 25		BT280418007	1

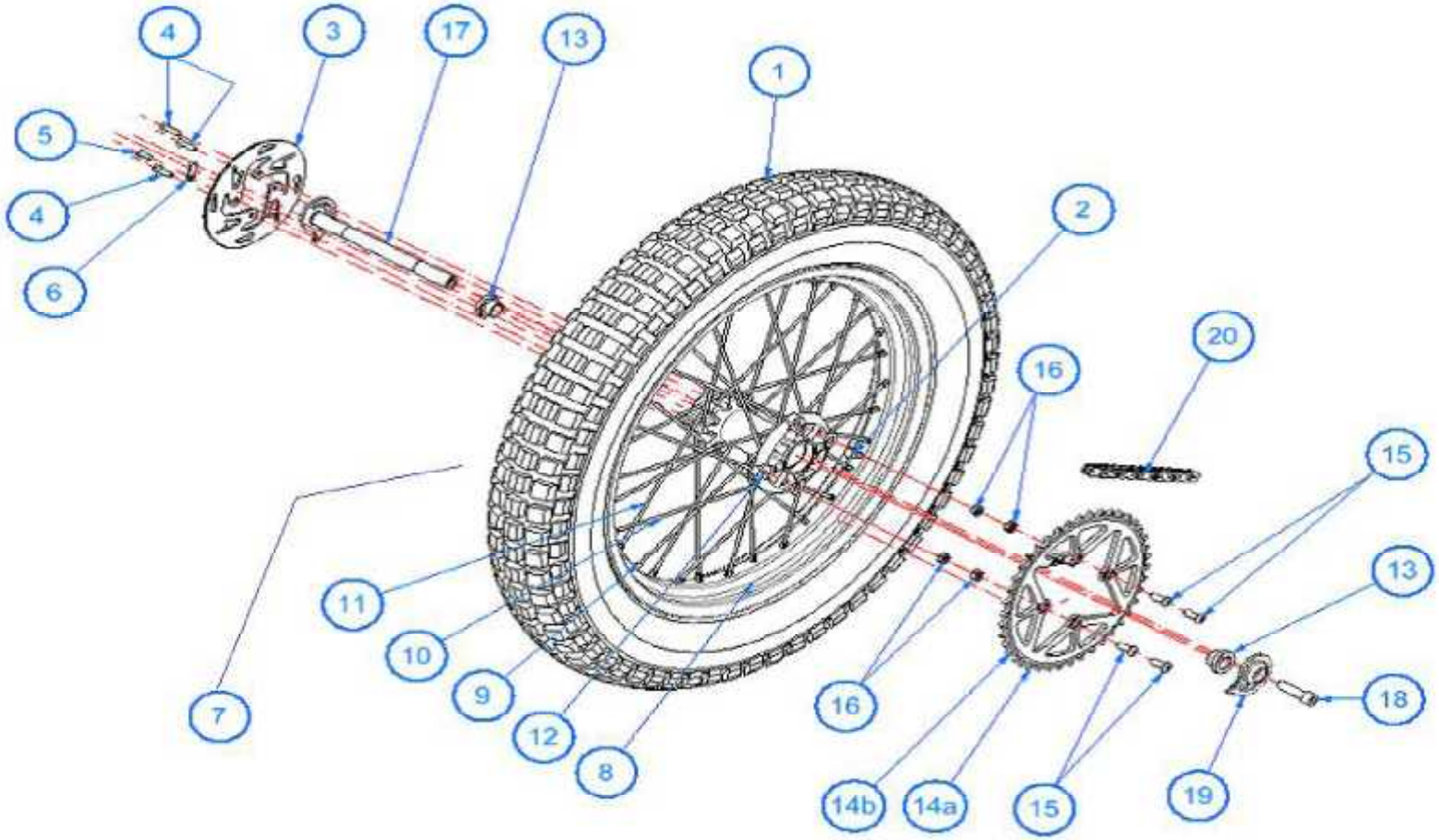
4
3
17
13
1
5
4
6
2
20
16
15
13
11
10
9
12
8
7
16
18
14b
14a
15
19

Nº	DESCRIPCION / DESCRIPTION		125	Cant.
1	NEUMATICO TRASERO 140/80/18 MT43 PAMPERA 125 4T		BPS551001211	1
2	FLAP TUBELESS CON VALVULA TRIAL 2008		BT551502808	1
3	DISCO FRENO TRASERO TRIAL 2003		BT280322012	1
4	TORNILLO ESPECIAL 6x20 8.8 ZINCADO		T0206020	3
5	ULS 6X15		T0506015	1
6	IMAN CTA.KMS IPLA00300		BT280234012	1
7	CTO. RUEDA TRASERA RANDONNE		BPS55000CT1211	1
8	LLANTA TRASERA TRIAL PRO C.TITANIO 2010		BT590002810	1
9	TUERCA RADIOS M4 RUEDA TRAS.DIA.7 =R500007 M4X0.70		BT27718016	32
10	RADIO 3.4x220 RUEDA TRAS.TRIAL		BRT500118014	16
11	RADIO 3.4x215 RUEDA TRAS.TRIAL		BRT500118015	16
12	BUJE RUEDA TRASERA TRIAL SXXI		BT280218027	1
13	DISTANCIADOR RUEDA TRAS. 7.5mm COLOR TITANIO		BT58100R3009	2
14a	CORONA Z-46 TRIAL 200cc		BT200218034	1
14b	CORONA TRIAL COLOR ALUMINIO 38Z		BPS573001211	1
15	ULS 8x22 CORONA		T0508022	4
16	TUERCA AUTOBL. M-8 BAJA (DIN 985)=T2108001/2		T2108001	4
17	CTO. EJE RUEDA TRASERA TRIAL 2007		BT280718020CT	1
18	TORNILLO EJE RUEDA TRASERA TRIAL 2007		BT280718023	1
19	EXCENTRICA IZQ. RUEDA TRASERA TRIAL 2007		BT280718022L	1
20	CADENA CON ENGANCHE 99P.+ ENNGANCHE+MALLA 125 520RXL		BRS578001213	1

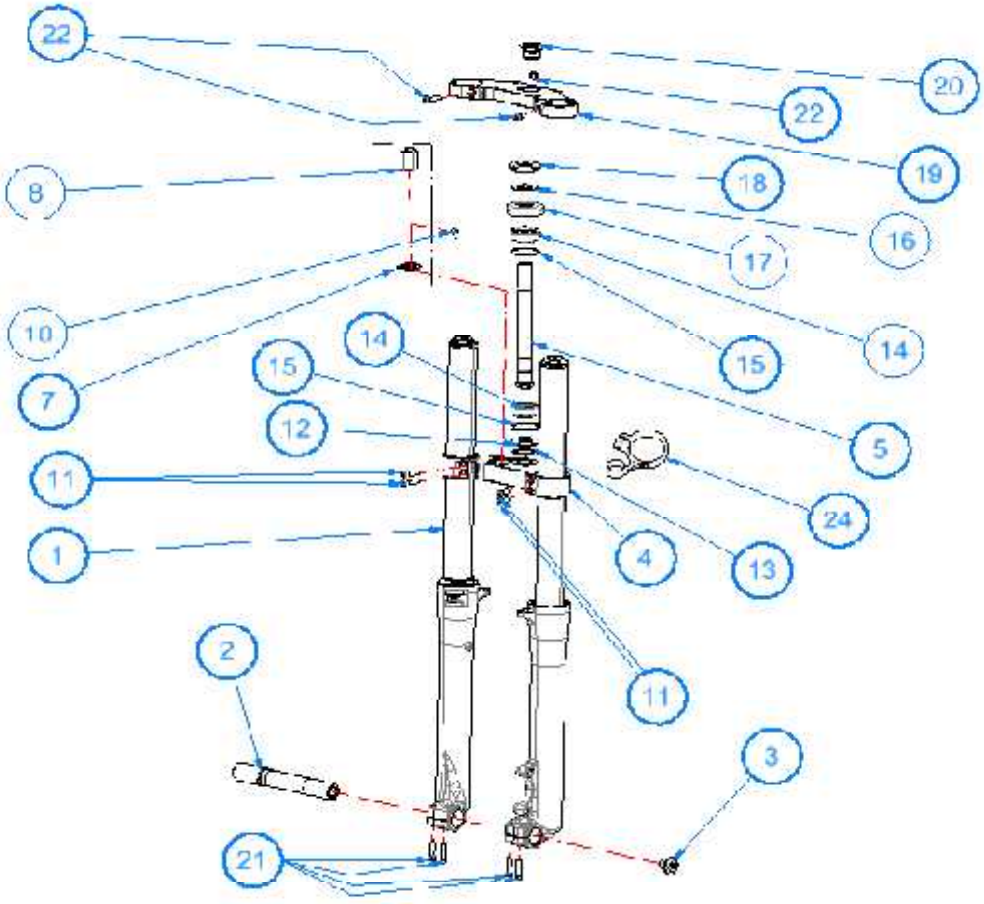
22
22
20
19
18
8
16
17
10
14
15
14
15
7
12
5
11
24
1
4
13
2
11
3
21

Nº	DESCRIPCION / DESCRIPTION					125	Cant.
1	SUSPENSION DELANTERA (BARRA ACERO)					BPS200001211	1
2	EJE D.25 RUEDA DEL. COLOR TITANIO T. RAGA 2009					BT53000R3009	1
3	TORNILLO EJE DEL. COLOR TITANIO T. RAGA 2009					BT53010R3009	1
4	BRIDA SUSPENSION INFERIOR TRIAL 2012					BT20000013012	1
5	EJE DIRECCIO TRIAL 2002					BT280214003	1
6	CTO.SOPORTE CLAUSOR TRIAL 2002					BT280210071	1
10	ULS 6X10 DIRECCION					T0506010	1
11	ALLEN 6X20 12.9					T0306020	4
12	ARANDELA TORICA DIRECCION ZINC.42x20x1					BT280210026	1
13	TORICA DIRECCION 37x2.5 ENDUPAMP 250					BEP250210012	1
14	COJINETE DIRECCION URBXA 32004					BT280210008	2
15	VOLANDERA 36X42X0.5					T4003642	2
16	ARANDELA 22.4x36X0.7 REGLAJE CASQ.BASC y EMBRAGUE					T4022036	1
17	GUARDAPOLVO COJINETE DIRECCION ENDUPAMP 250-2002					BEP250210026	1
18	TUERCA DIRECCION 510040					BT280410029	1
19	PLETINA SUPERIOR SUSP DEL					BT220002809	1
20	TUERCA SUPERIOR DIRECCIÓN					BT280410030	1
21	TORNILLO ESPECIAL 6X25 VALONA 11MM					T0206025	4
22	ALLEN 6X20 12.9					T0306020	3
23	KIT RETEN-GUARDAPOLVO SUSP DEL RANDONNE 2011					BT20000091211	1
24	GUIA LATIGUILLO FRENO SUSPENSION RACING					BT21600RA3010	1

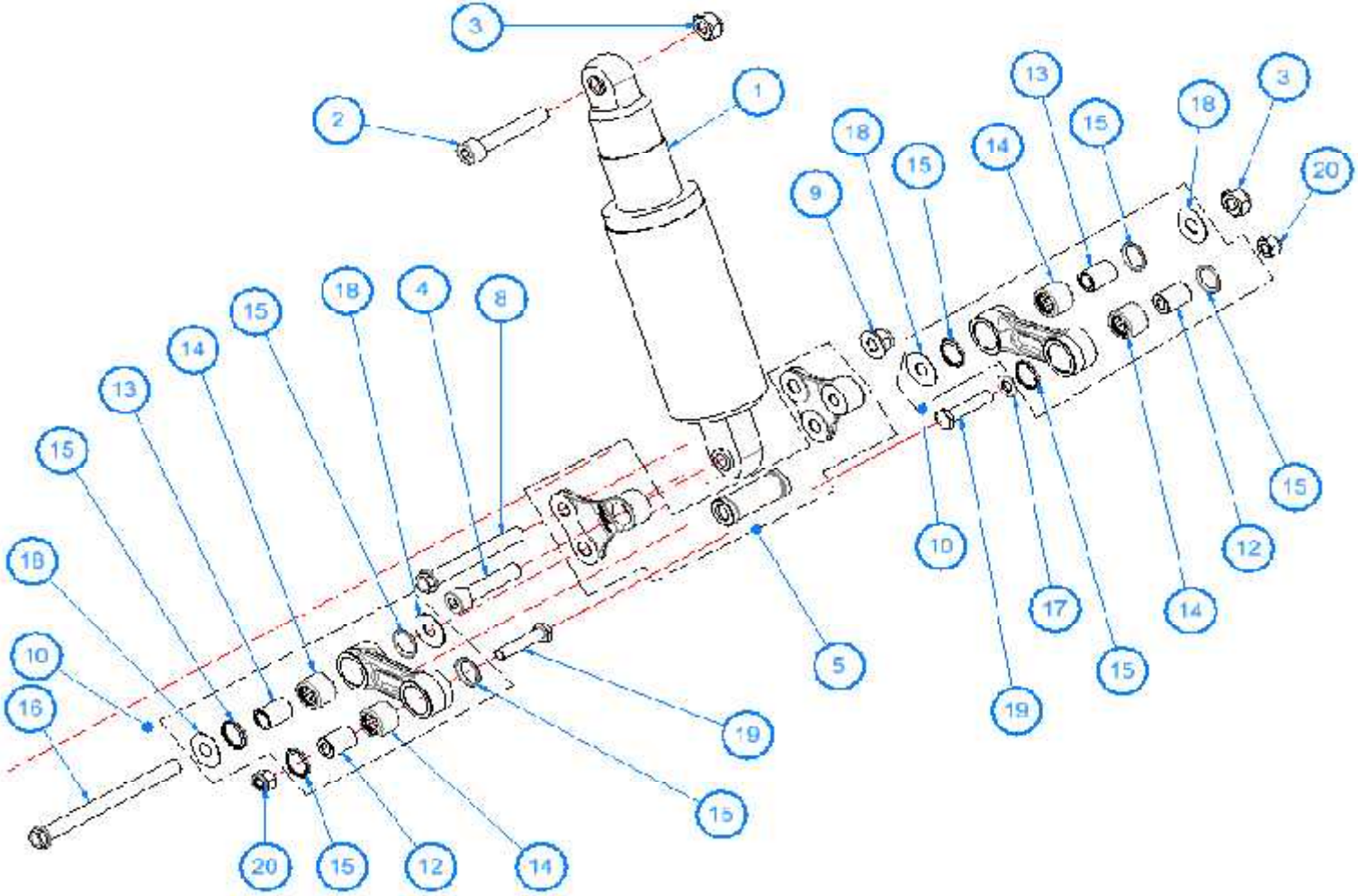
3
2
1
13
3
18
15
18
15
14
20
9
18
4
8
15
14
13
15
15
10
12
18
17
14
10
5
15
16
19
19
15
20
15
12
14

Nº	DESCRIPCION / DESCRIPTION		125	Cant.
1	AMORTIGUADOR TRIAL SCHOOL 2010		BT30000S2810	1
2	ALLEN 10X60 12.9		T0301060	1
3	TUERCA AUTOBL. M-10 (DIN 985) CLASE (10) SUS T3110002		T2110001	2
4	ALLEN 10X48 17mm. ROSCA 12.9 DACROMET		T0310046	1
5	BALANCIN COMPLETO TRIAL COLOR TITANIO RAGA 2009		BT32000RCT3009	1
8	TORNILLO ESP.M10X80X1.25 12.9 FIL.17 ZINCADO BLANCO		T0210080	1
9	TUERCA AUTOB. M10 PASO 1.25 PLATA		T3110002	1
10	BIELETA ALUMINIO TRIAL COMPLETA		BT280014008CT	2
12	CASQUILLO SUSP.DIAM.10 97		BT27712005	2
13	CASQUILLO SUSP.DIAM.8 TRIAL 97		BT27712014	2
14	COJINETE AGUJAS 15BM2116		BT27714009	4
15	RETEN 15X21X2		C230001	8
16	TORNILLO ESPE. M10X120		T0210120	1
17	ARANDELA DE 8X16X1,5		T4008016	1
18	ARANDELA REGLAJE 10.5X26X0.5		T4001026	4
19	TOR.BIELETA ESPECIAL 8X38 12.9 CAP.REBAJ.		T0118038	2
20	TUERCA AUTOBL.M-8 ALTA (DIN 982)		T2108002	2
21	CASQ.DIST.BALANCIN		BT27914016	1

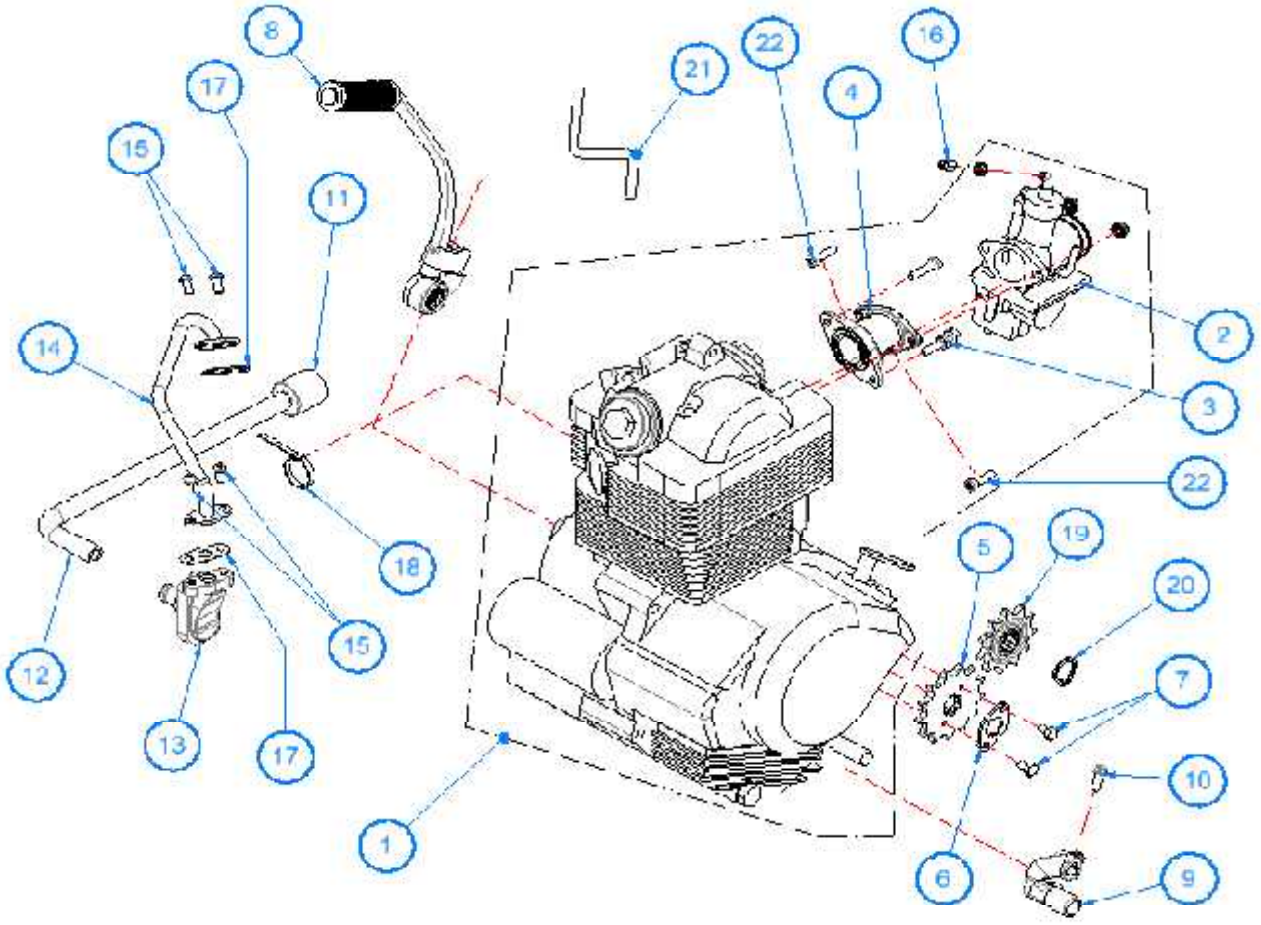
8
17
15
11
14
18
12
15
13
17
1
21
22
4
16
2
3
22
5
19
20
7
10
6
9

Nº	DESCRIPCION / DESCRIPTION		125	Cant.
1	MOTOR 125CC		MPS12-11	1
2	CARBURADOR		BPS780001211	1
3	TORNILLO HEX. ANTIMANIP. 6X25		T0106025H	1
4	TOBERA DE ADMISION PAMPERA 125 4T		BPS781071211	1
5	PIÑON SALIDA TRANSMISION PAMPERA 125 4T 2011		MPS427001211	1
6	PLETINA FIJAR PIÑON SALIDA		BT050021211	1
7	EXAGONAL M6X10		T0106010	2
8	CTO. PALANCA ARRANQUE CON MUÑEQUILLA		MPS890001211	1
9	PALANCA CAMBIO VELOCIDADES		MPS490001211	1
10	TORNILLO ESPECIAL 6X16 8.8 ZINCADO		T0206020	1
11	FILTRO AIRE SECUNDARIO TRIAL PRO 2006 CEX		BT280626059	1
12	TUBO AIRE SECUNDARIO LARGO EC-2009		BE785551209	1
13	VALVULA AIS 14GH-01AI-00 TRIAL PRO 07		BT280626060	1
14	TUBO AIRE SECUNDARIO VALVULA - CULATA		BPS880101211	1
15	ULS 6X12 TOPE FREN,PRO.FIL,		T0506012	4
16	CASQUILLO ADAPTADOR CABLE GAS A CARBURADOR		BPS784001211	1
17	JUNTA VALVULA AIRE SECUNDARIO TRIAL 2006		BT280626065	2
18	BRIDA UNEX 2244 4.8X20		BE25634009	1
19	PIÑON SALIDA Z9 PASO 520		MRS445001213	1
20	SEEGER DIN 471-472 REFORZADO 20x175 PARA EJE		SE03020175200	1
21	TUBO SALIDA GASES CARTER 8,5X12,5X155		MT10000011211	1
22	ALLEN 6X16 BOMBA EMB.12.9		T0306016	2