GASGAS

2012

TXT RACING 2012

125-280-300

DESPIECE / / PART LIST

TECHNOLOGY
&
MOTION
GASGAS
NOVIEMBRE / NOVEMBER / NOVEMBRE / NOVEMBRE / NOVEMBER 2012

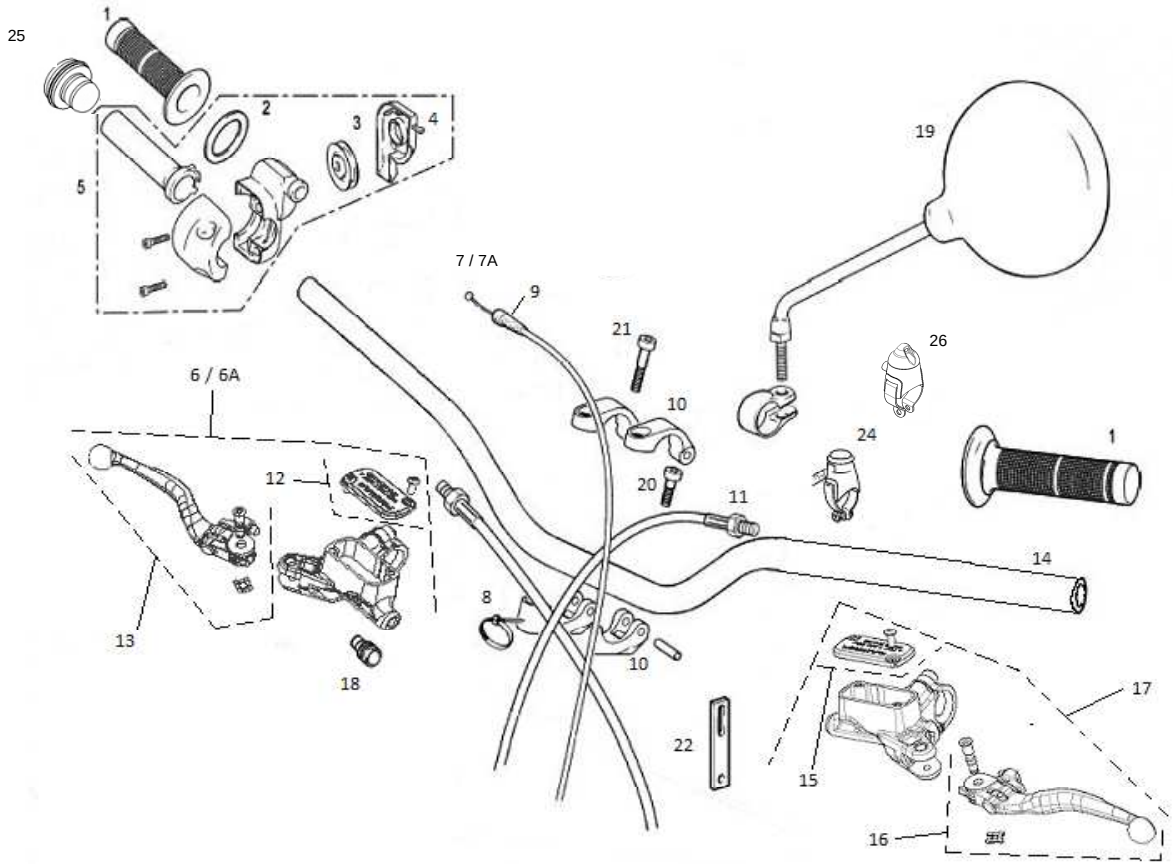
25
1
2
3
4
5
7 / 7A
9
21
19
26
6 / 6A
10
24
1
12
20
11
14
13
8
10
18
22
17
15
16

Nº	DESCRIPCION / DESCRIPTION				125 / 280 / 300	Cant.
1	JUEGO EMPUÑADURAS RENTHAL G096A				BT26100RA3010	1
2	ARANDELA MANDO GAS / TWIST GRIP WASHER				BT27922078	1
3	RODILLO MANDO GAS / TWIST GRIP ROLLER				E119000	1
4	TAPA MANDO GAS / TWIST GRIP COVER				E140000	1
5	PUÑO MANDO GAS / CPT. TWIST GRIP				E100001	1
6	BOMBA FRENO DELANTERO HOMOLOGADO/ FRONT BRAKE PUMP HOOMOLOGATED				BT60000033012	1
6A	BOMBA FRENO DELANTERO / FRONT BRAKE PUMP				BT60000053012	1
7	CABLE DE GAS / THROTTLE CABLE				BT27924008	1
7A	CABLE DE GAS 370-96 CEX				E160003	1
8	BRIDA UNEX 4.8X20 / UNEX 4.8X20 CLAMP				BE25634009	1
9	GUARDAPOLVO CABLE GAS / THROTTLE CABLE DUST COVER				G600000	1
10	BRIDA MANILLAR / HANDLEBAR CLAMP				BT280414012C	1
11	LATIGUILLO EMBRAGUE TRIAL / CLUTCH TUBE				BT280522003	1
12	TAPA BOMBA FRENO / COVER BRAKE PUMP				BT60000113012	1
13	MANETA FRENO / BRAKE LEVER TRIAL				BT60000103012	1
14	MANILLAR TRIAL RAGA 2010- PROTEC 67302TT + P253				BT25000RA3010	1
15	TAPA BOMBA EMBRAGUE / COVER CLUTCH PUMP SET				BT45000033012	1
16	MANETA EMBRAGUE / CLUTCH LEVER				BT45000023012	1
17	BOMBA EMBRAGUE / CLUTCH PUMP				BT45000013012	1
18	CASQUILLO PULSADOR FRENO DELANTERO / PUSH BUTTON BUSHING				BT27922079	1
19	ESPEJO RETROVISOR / REAR VIEW MIRROR				L300760	2
20	TORNILLO UFK 8X20 / 8X20 UFK SCREW				T0318020	2
21	TORNILLO UFK 8X50 / 8X50 UFK SCREW				T0318050	2
22	GOMA SUJECIÓN CABLEADOS / WIRE SUBJET RUBBER				BFS450320067	1
24	PULSADOR PARO TRIAL PRO RACING 08 / TRIAL PRO RACING 08 STOP SWITCH				BC250334055	1
25	RODAMIENTO+CASQUILLO MANDO GAS TXT RACING 2010				BT26010R3010	1
26	DISPOSITIVO SEGURIDAD PILOTO				ET10000023012	1

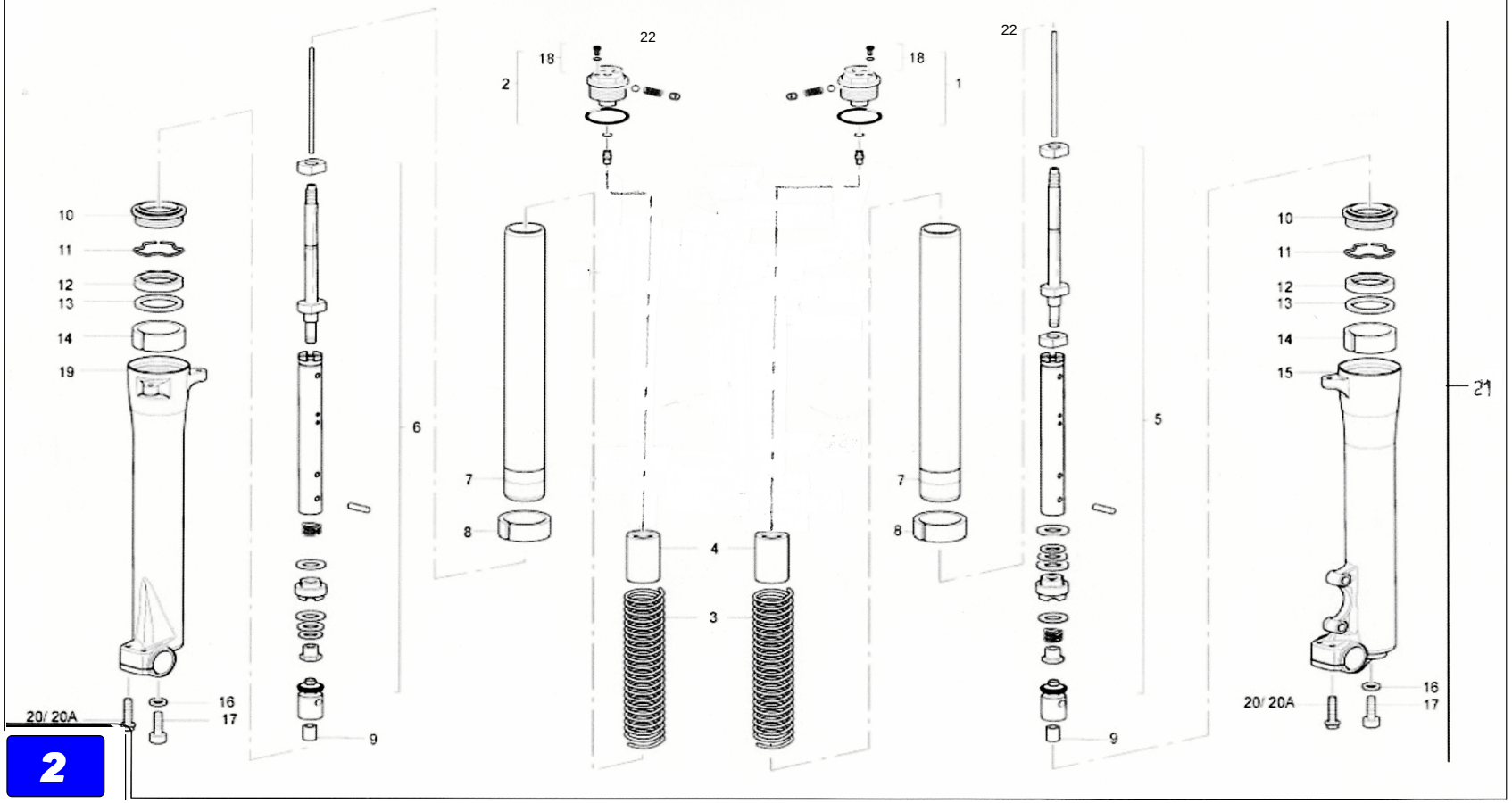
22
18
2
1
10
11
12
13
14
19
15
21
6
5
7
8
4
3
16
17
20/ 20A
9

Nº	DESCRIPCION / DESCRIPTION	125 / 280 / 300	Cant.
1	CTO. TAPÓN REGULACIÓN COMPRESIÓN / ADUSTING COMPRESSION CAP	BT280714105	1
2	CTO. TAPÓN REGULACIÓN EXTENSIÓN / ADUSTING RETURN CAP	BT280714106	1
3	MUELLE SUSPENSIÓN / FRONT FORK SPRING	BT201702809	2
4	TOPE PRECARGA AMORTIGUADOR / PRE-LOAD WASHER	BT20090R3009	2
5	REGULADOR HIDRÁULICO COMPR. / ADJUSTER TOP COMPRESSION	BT280614114	1
6	CONJUNTO HIDRÁULICO EXTENSIÓN / HYDRAULIC EXTENSION ASSEMBLY	BT280614115	
7	BARRA SUSPENSIÓN / FRONT FORK INNER TUBE	BT280614110	2
8	GLACIER SUSPENSIÓN / GLACIER BUSHING	BT280414111	2
9	CENTRAJE TUBO HIDRÁULICO / SPACER BUSH	BT280414219	2
10	GUARDAPOLVO / DUST SEAL	BT280414131	2
11	SEEGER SUSPENSIÓN TRIAL / TRIAL FRONT FORK SEEGER	BT200252809	2
12	RETÉN / SEAL	BT280414212	2
13	ARANDELA SUPERIOR TRIAL / TRIAL UPPER WASHER	BT280414133	2
14	GLACIER BOTELLA SUSPENSIÓN / TUBE GLACIER BUSH	BT280414134	2
15	BOTELLA IZQUIERDA SUSPENSIÓN TRIAL / LEFT OUTER TUBE	BT20000083011	1
16	ARANDELA GOMA INTERIOR / FRONT FORK WASHER SEAL	BT280414145	2
17	ALLEN / ALLEN SCREW	BT280414249	2
19	BOTELLA DERECHA SUSPENSIÓN TRIAL / RIGHT OUTER TUBE	BT20000073011	1
20	TORNILLO EXAGONAL CON BALONA M6X25 / EXAGONAL SCREW M6X25	T0206025	4
21	SUSPENSIÓN TRIAL MARZOCCHI / TRIAL SUSPENSION SET MARZOCCHI	BT20000023012	1
22	CTO. SANGRADOR AIRE	BT280714103	1

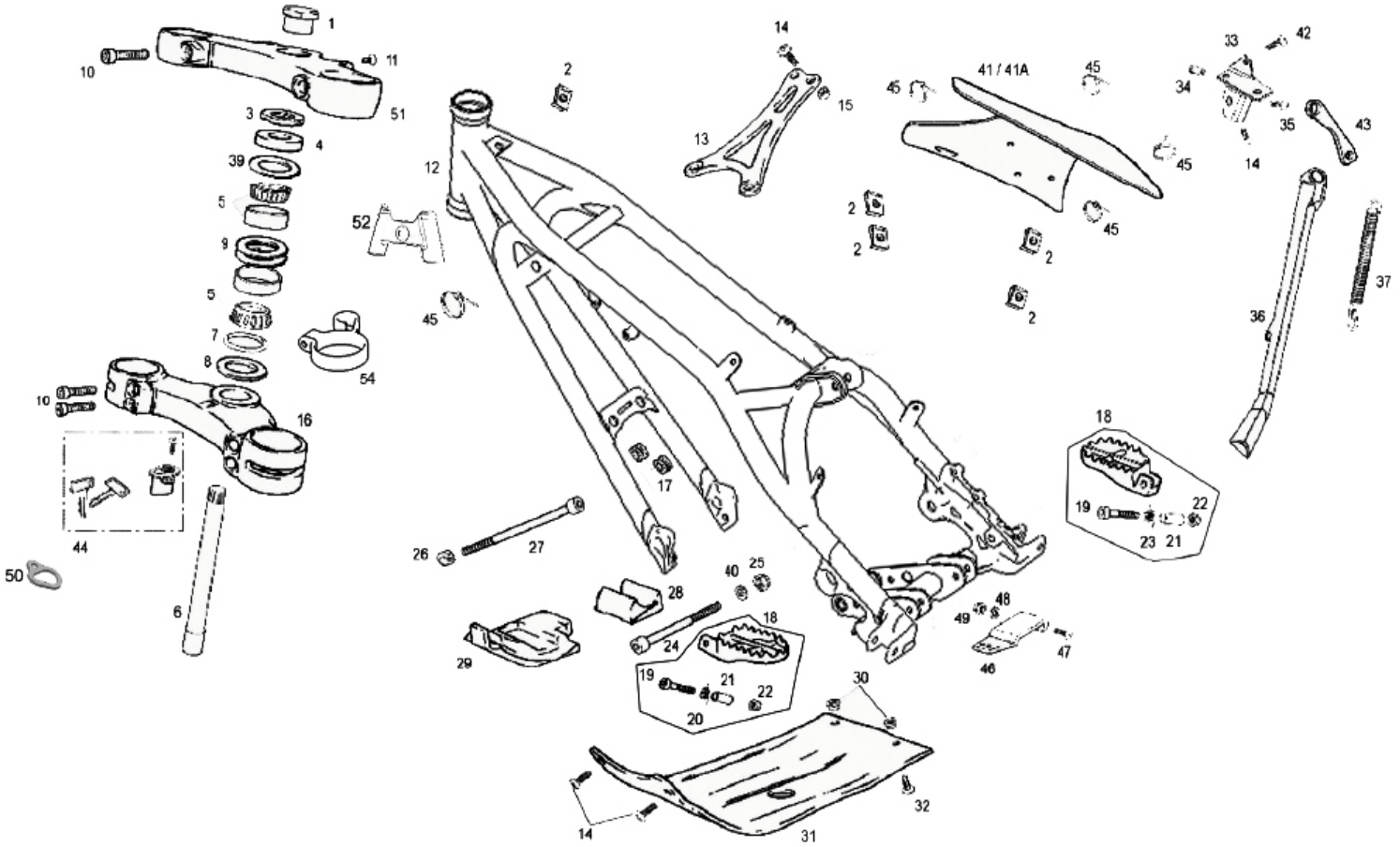
1
10
11
51
3
4
39
5
9
5
7
8
10
16
44
50
6
2
12
52
45
54
14
15
13
41 / 41A
45
45
45
2
2
2
2
33
42
34
35
43
14
36
37
18
19
22
23
21
17
26
27
28
40
25
18
24
29
19
21
22
20
30
48
49
47
46
32
14
31

Nº	DESCRIPCION / DESCRIPTION	125 / 280 / 300	Cant.
1	TUERCA SUPERIOR DIRECCIÓN TRIAL / NUT TOP STEERING AXLE	BT280210030	1
2	TUERCA NUT 956 RAPIDA M6 / M6 FAST NUT	T2606000	5
3	TUERCA INFERIOR DIRECCIÓN TRIAL / NUT UNDER TOP CLAMP	BT280410029	1
4	GUARDAPOLVO COJINETES DIRECCIÓN / BEARING STEERING, DUST COVER	BEP250210026	1
5	COJINETE DIRECCIÓN URBXA 32004 / BEARING STEERING	BT280210008	2
6	EJE DIRECCIÓN TRIAL 2002 / AXLE STEERING	BT280214003	1
7	TÓRICA DIRECCIÓN 37X2,5 ENDUPAMP 250 / O'RING STEERING	BEP250210012	1
8	ARANDELA REGLAJE BLANCA / WHITE WASHER	BT280210026	1
9	ARANDELA 36X42X0.5 / 36X42X0.5 WASHER	T4003642	2
10	ALLEN M6x25 / ALLEN SCREW M6x25	T0306025	7
12	CHASIS TRIAL / TRIAL FRAME	BT100002811	1
13	TIRANTE CILINDRO / BRACE CYLINDER	BT280110050	1
14	ULS 8X20 / 8X20 ULS	T0508020	7
15	TUERCA AUTOBLOCANTE M-8 ALTA / SELF-LOCKING NUT M8 HIGH	T2108002	4
16	PLATINA INFERIOR TRIAL / FORK CLAMP (LOWER)	BT20000013012	1
17	GOMAS RADIADOR A CHASIS / RADIATOR PROTECTOR RUBBER	G220000	3
18	CTO. ESTRIBOS TRIAL RAGA 2009 CEX	BT14000RCT3009	1
19	PASADOR ESTRIBERA / SCREW	T0508045	2
20	MUELLE ESTRIBO IZQUIERDO / SPRING FOOTSTEP (LEFT)	M100004	1
21	CASQUILLO ESTRIBO TRIAL-99 / BUSH FOOTSTEP	BT27910006	2
22	TUERCA AUTOBLOCANTE M-8 BAJA (DIN 982) / NUT NYLOCK LOW	T2108001	2
23	MUELLE ESTRIBO DERECHO / SPRING FOOTSTEP, RIGHT	M100003	1
24	ALLEN 10x85 / 10X85 ALLEN BOLT	T0301085	1
25	TUERCA AUTOBLOCANTE M10 BAJA / SPECIAL M10 NUT	T2110001	1
26	TUERCA ESPECIAL M10 / SPECIAL M10 NUT	BT280210069	1
27	ALLEN M10X140 ZINCADO 12.9 / SCREW, BOLT ALLEN M10X140	T0310140	1
28	GOMA PROTECTOR TRASERO MOTOR / REAR ENGINE PROT. RUBBER	BT280336029	1
29	GOMA PROTECTOR DELANTERO MOTOR / FRONT ENGINE PROT. RUBBER	BT280236030	1
30	CASQUILLO PROTECTOR CÁRTER / CHASIS TRIAL / BUSHING	BT280310883	2
31	PLACA PROTECTOR CARTER RACING 2012	BT10000013012	1
32	ULS 8X16 / ULS 8X16	T0508016	2
33	SOPORTE CABALLETE TRIAL 2000 / SIDE STAND BRACKET SUPPORT	BT280712023	1

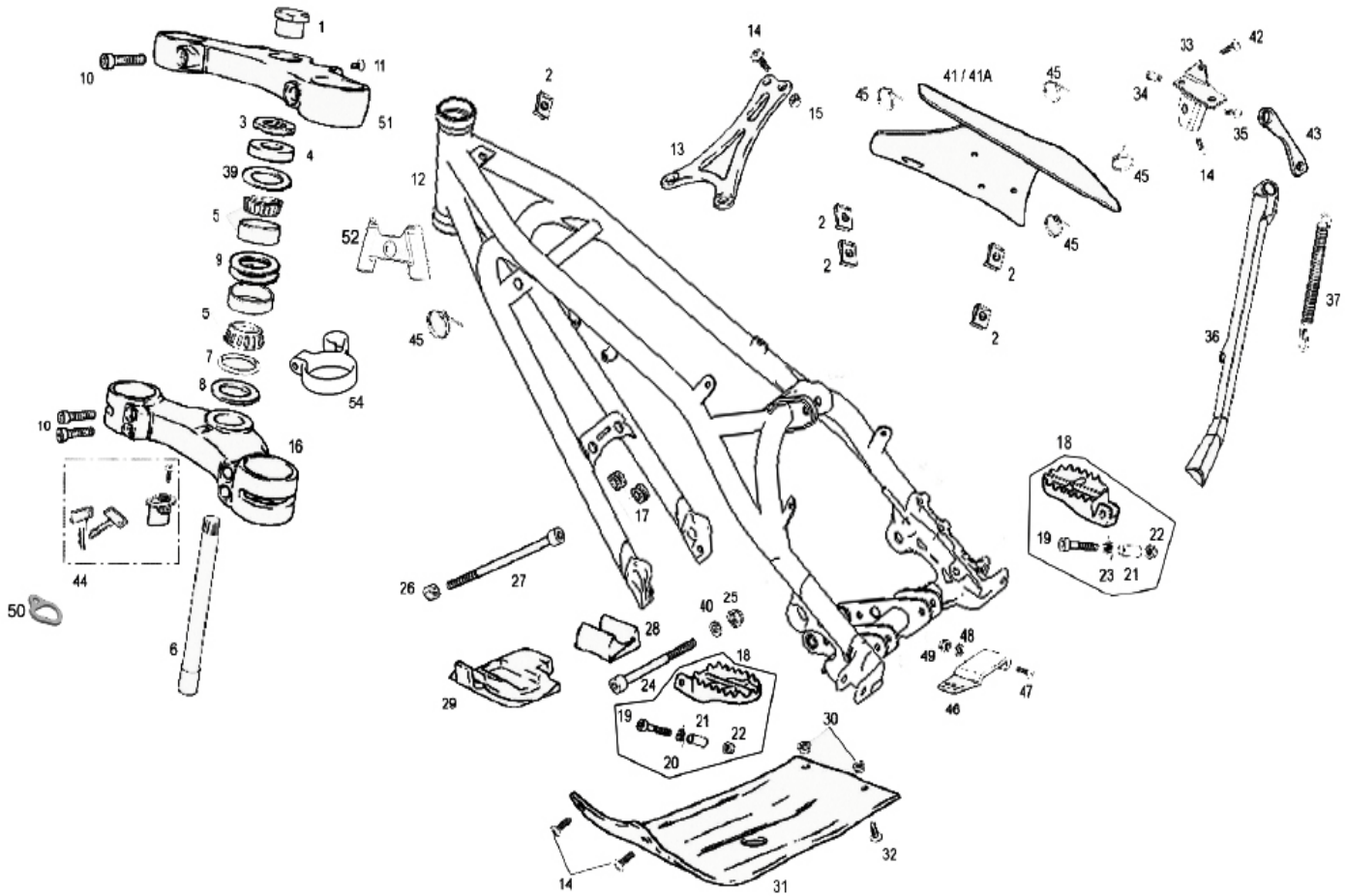
1
10
11
51
3
4
39
5
9
5
7
8
10
16
44
50
6
2
12
52
45
54
14
15
13
41 / 41A
45
45
33
42
34
35
43
14
2
2
2
2
45
36
37
18
19
22
23
21
17
26
27
40
25
28
18
24
29
19
21
22
20
30
48
49
47
46
14
31
32

Nº	DESCRIPCION / DESCRIPTION	125 / 280 / 300	Cant.
34	CASQUILLO GUÍA CABALLETE TRIAL / BUSH, PIVOT SIDE STAND	BT27712011	1
35	ALLEN 8X14 / 8X14 ALLEN BOLT	T0308014	1
36	CABALLETE TRIAL 99 / SIDE STAND BRACKET	BT280712010	1
37	MUELLE CABALLETE / SIDE STAND SPRING	BT280310039H	1
39	ARANDELA 22.4X36X0.7 REGLAJE / REGULATE WASHER	T4022036	1
40	ARANDELA GLOBER 10X15 / GLOBER WASHER	T4001015	1
41	GOMA PROTECCIÓN CAJA-CHASIS CORTA TRIAL PRO / SHORT PROTECT RUBBER	BT280236033	1
41A	GOMA PROTECCIÓN CAJA-CHASIS LARGA TRIAL PRO / LONG PROTECT RUBBER	BT280236034	1
42	HEXAGONAL 6X16 / 6X16 HEXAGONAL BOLT	T0106016	1
43	EXCÉNTRICA CABALLETE TRIAL HOMO. / ADJUSTER	BT280312025H	1
44	CTO. BLOQUEO CLAUSOR / LOCKING CLAUSOR SET	BT280210075	1
45	BRIDA UNEX 2244 4.8X20 / 4.8X20 BLACK CLAMP	BE25634009	3
46	PROTECTOR CADENA A CHASIS / CHAIN PROTECTOR	BT280212026	1
47	TORNILLO ULS 6X25 / ULS 6X25	T0506025	1
48	ARANDELA PLANA 6.5X16X1.5 / WASHER 6.5X16X1.5	T4006016	1
49	TUERCA AUTOBLOCANTE DIN-6926 M6 CON ARANDELA ZN / NUT NYLOCK	T2206002	1
50	PLATINA TAPA CLAUSOR / CLAMP COVER	BT280210077/1	1
51	PLATINA SUPERIOR / UPPER CLAMP	BT220002809	1
52	TOPE DIRECCION CHASIS / GEAR PROTECTION RUBBER	BT170002809	1
53	BOTE DE PINTURA PARA CHASIS	BT10990R3009	1
54	GUIA LATIGUILLO FRENO DELANTERO / BREAK HOSE GUIDE	BT21600RA3010	1

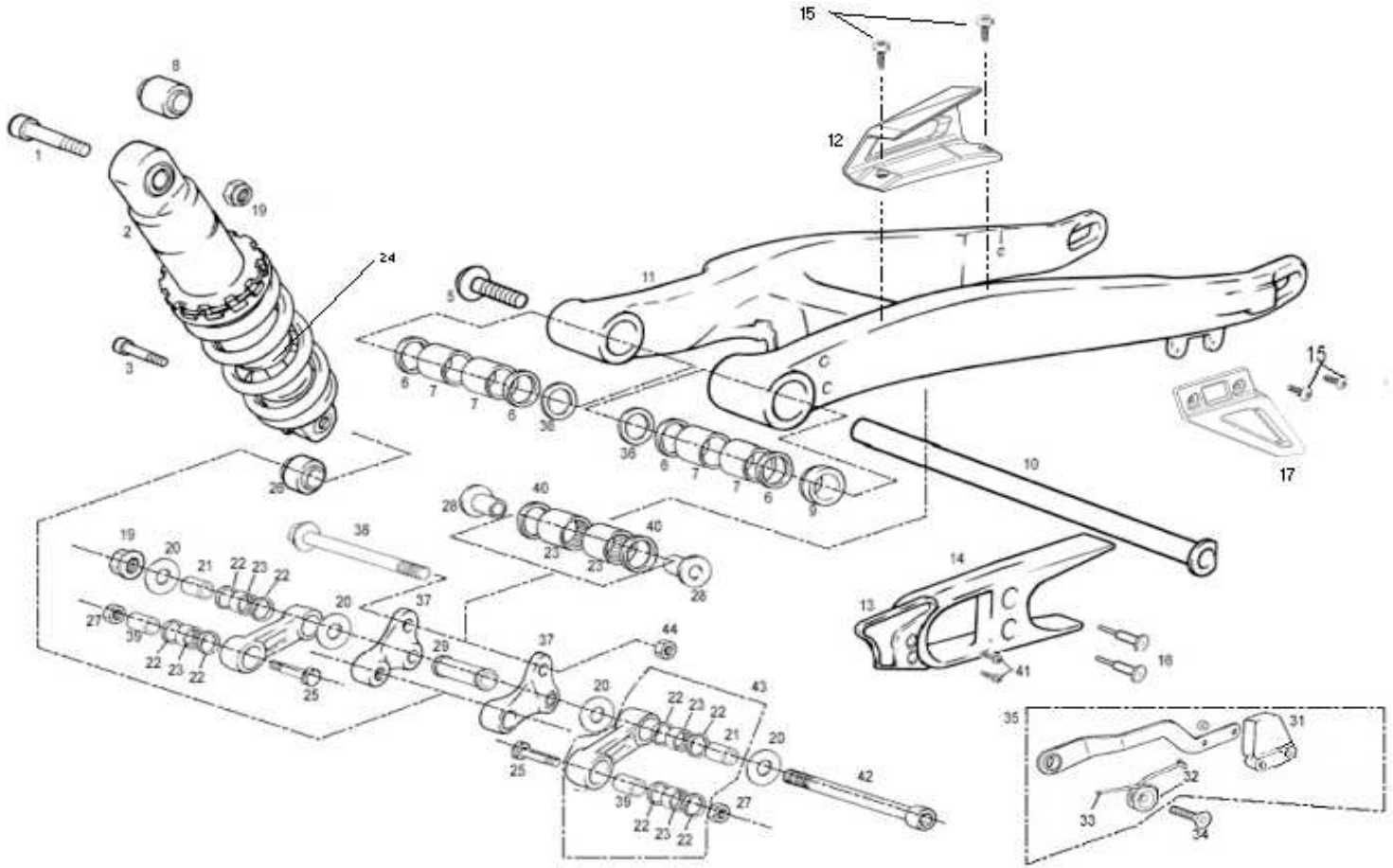
15
12
8
1
19
2
24
11
5
3
6
7
7
6
36
36
6
7
7
6
9
10
15
17
26
28
40
40
23
23
28
19
20
21
22
23
22
38
20
37
27
39
22
23
22
25
29
37
44
20
22
23
22
21
20
43
25
42
39
22
23
22
27
14
13
41
16
35
31
32
33
34

Nº	DESCRIPCION / DESCRIPTION	125 / 280 / 300	Cant.
1	ALLEN 10X63 / 10X63 ALLEN SCREW	BT35000013011	1
2	AMORTIGUADOR 2 VIAS REIGER(320.1.01.07.M)	BT30000023012	1
3	TORNILLO ESPECIAL / SPECIAL SCREW	T0310046	1
4	GOMA PROTECCIÓN AMORTIGUADOR TRASERO / REAR SHOCK PROTECTOR	BT280236041	1
5	TORNILLO EJE BASCULANTE TRIAL / SWING-ARM AXLE SCREW	BT280212009	1
6	RETÉN 20-26-4 870 N BASCULANTE / 20-26-4 OIL SEAL	C220001	4
7	COJINETE / BEARING	BT280212032	4
8	SILENTBLOCK AMORTIGUADOR / REAR SHOCK ABSORVER SILENTBLOCK	BT280414305	1
9	CASQUILLO GUÍA EJE BASCULANTE / SWING-ARM AXLE BUSHING	BT280212108	1
10	EJE BASCULANTE TRIAL / SWING-ARM AXLE	BT44500R3009	1
11	BASCULANTE TRIAL / TRIAL SWING-ARM	BT40000013011	1
12	CUBRECADENAS / CHAIN COVER	BT42040RA3011	1
13	PROTECTOR PIÑÓN TRIAL 2002 / PINION PROTECTOR	BT280236021	1
14	PATÍN CADENA / CHAIN GUIDE	BT280412015	1
15	ULS 5X12 / 5X12 ULS	T0505012	4
16	REMACHE CABOTA GRANDE 14X4 8X21 PATÍN / RIVET	T4505016	2
17	PROTECTOR CORONA TRIAL 2003 / SPROCKET PROTECTOR	BT57350RA3011	1
18	TORNILLO ROSCA CHAPA PHILIPS 4X38 / 4X38 PHILIPS SCREW	T0614838	2
19	TUERCA AUTOBLOCANTE / SELF-LOCKING NUT	T2110001	2
20	ARANDELA REGLAJE 10.5X26X0.5 / 10.5X26X0.5 WASHER	T4001026	4
21	CASQUILLO SUSPENSIÓN DIAM. 10 / SUSPENSION BUSHING	BT27712005	2
22	RETÉN 15X21X2 / 15X21X2 OIL SEAL	C230001	8
23	COJINETE AGUJAS 15BM2116 / NEEDLE BEARING	BT27714009	6
24	TOPE AMORTIGUADOR / SHOCK ABSORVER END OF TRAVEL	BT311002809	1
25	TORNILLO ESPECIAL BIELETA 8X38 / 8X38 SPECIAL SCREW	T0118038	2
26	RÓTULA AMORTIGUADOR / BALL AND SOCKET JOIN	BT280214300	1
27	TUERCA AUTOBLOCANTE M8 ALTA / SELF-LOCKING NUT	T2108002	2
28	CASQUILLO BALANCÍN 99 / ARTICULATION BUSHING	BT27914014	2
29	CASQUILLO DISTANCIADOR BALANCÍN / ARTICULATION SPACER BUSHING	BT27914016	1
31	GOMA TENSOR CADENA / TENSIONER CHAIN RUBBER	BT42010RA3010	1
32	CASQUILLO TENSOR CADENA / CHAIN TENSIONER BUSHING	B560000	1
33	MUELLE TENSOR CADENA / CHAIN TENSIONER SPRING	M122000	1
34	ALLEN CONICO 8X30 TENSOR CADENA / 8X30 CONIC ALLEN	T0408030	1

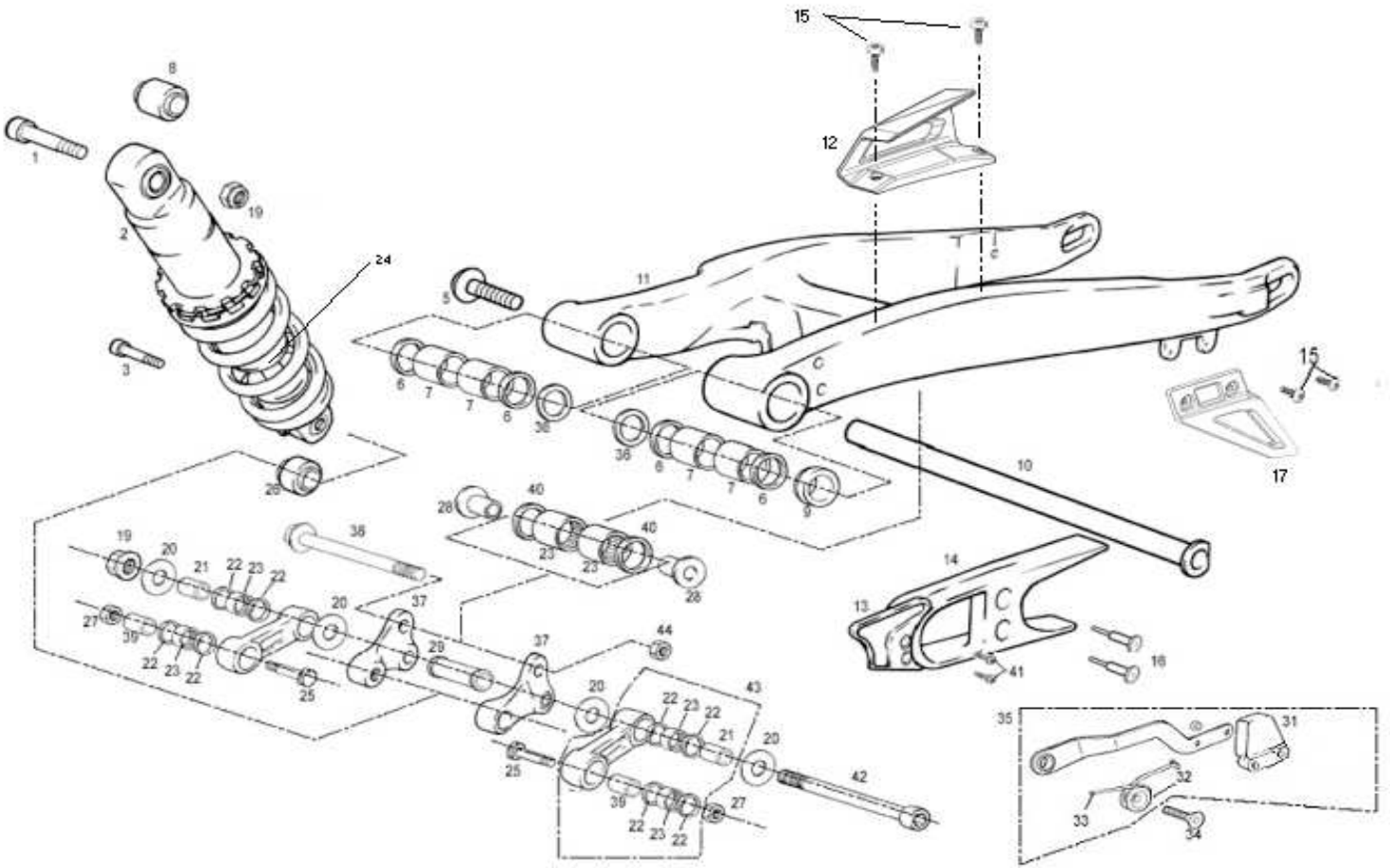
15
12
8
1
19
2
24
11
5
3
6
7
7
6
36
36
6
7
7
6
9
10
15
17
26
28
40
40
23
23
28
38
19
20
21
22
23
22
20
37
27
39
22
23
22
25
29
37
44
20
22
23
22
21
20
43
25
42
39
22
23
22
27
14
13
41
16
35
31
32
33
34

Nº	DESCRIPCION / DESCRIPTION	125 / 280 / 300	Cant.
35	CTO. TENSOR CADENA / CHAIN TENSIONER ASSY.	BT42000RCT3009	1
36	ARANDELA BASCULANTE TRIAL 2002 / SWING-ARM WASHER	BT280212007	2
37	CTO. BALANCÍN TRIAL 2011 / ROCKER-ARM SET	BT30000023011	1
38	TORNILLO ESPECIAL M10X80X1.25 12.9 / M10X80X1.25 SCREW	T0210080	1
39	CASQUILLO SUSPENSIÓN DIAM.8 / DIAM. 8 SUSPENSION BUSHING	BT27712014	2
40	RETÉN 15-21-3-8170N BASC. BAL. / 15-21-3-8170N OIL SEAL	C230000	2
41	TORNILLO ROSCA-CHAPA 4.2X12 / 4,2X12 SCREW	T259349	2
42	ALLEN M10X125 / M10X125 ALLEN	BT35000033012	1
43	BIELETA ALUMINIO TRIAL COMPLETA / ALUMINIUM ROD SET	BT34000CT2812	2
44	TUERCA M10 / M10 NUT	T3110002	1

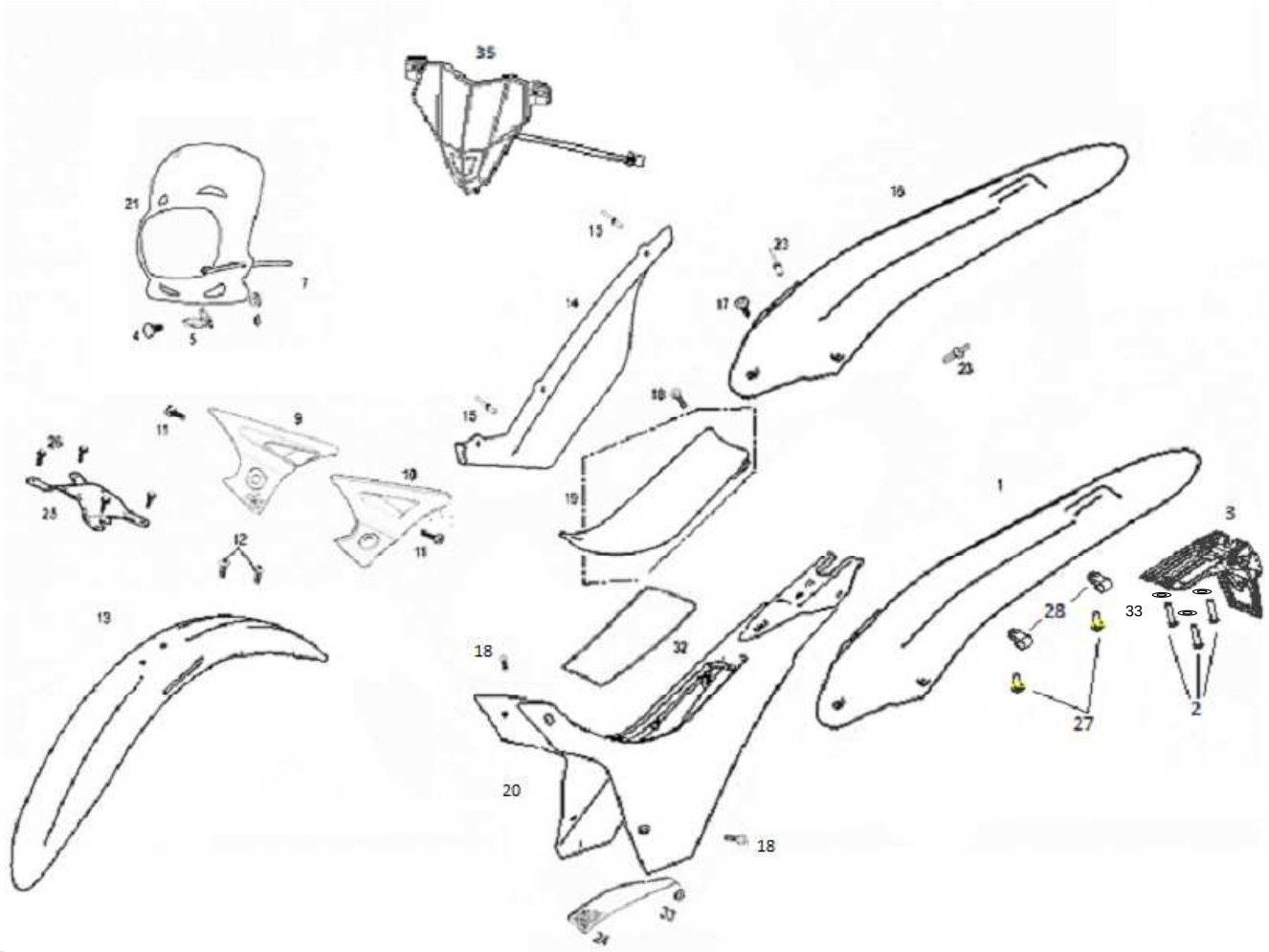
35
21
7
4
5
6
16
15
23
14
17
23
18
15
9
11
26
10
25
19
1
3
12
11
28
33
13
18
32
27
2
20
18
33
24

Nº	DESCRIPCION / DESCRIPTION	125 / 280 / 300	Cant.
1	GUARDABARROS TRAS. TRIAL HOMOLOGADO SIN ADHESIVO / TRIAL REAR FENDER NO STICKER	BT93500HRA3010	1
2	TORNILLO ROSCA PLASTICO 3,6x20	T0803020	3
3	PORTAMATRICULAS TRIAL HOMOLOGADO / TRIAL PLATE SUPPORT	BT93900RA3011	1
4	TORNILLO ULS 6X14 CON ARANDELA PLATA / ULS SCREW 6X14	T0556014	1
5	GANCHO INOXIDABLE / RUSTLESS HOOK	M130000	1
6	TUERCA CON ARANDELA M6 / M6 NUT WITH WASHER	T2206000	2
7	BRIDA UNEX / UNEX CLAMP	BE25634007	2
8	TORNILLO ROSCA-CHAPA 3X9 / 3X9 SCREW	T1003009	4
9	TAPA LATERAL DRCH. RAGA 2008	BT91500RA3008	1
10	TAPA LATERAL IZQ. RAGA 2008	BT92000RA3008	1
11	TORNILLO CHAPA 4.2X13 / SCREW 4.2X13	T0804612	2
12	ULS 5X8 / 5X8 ULS SCREW	T0505008	2
13	GUARDABARROS DELANTERO 2005 / TRIAL 2005 FRONT FENDER	BT90000073012	1
14	PROTECTOR ESCAPE TRIAL / EXHAUST PROTECTOR	BT947002811	1
15	REMACHE ALUMINIO 4X12 CABOTA NEGRA / ALUMINIUM RIVET	T4504012N	2
16	CTO. GUARDABARROS TRAS RACING CON ADHESIVO MY12	BT90000103012	1
17	ULS 6X16 CON ARANDELA NEGRO / 6X16 BLACK ULS WITH WASHER	T0556016	1
18	TORNILLO CONICO 6X16 INOX / INOX 6X16 CONIC SCREW	T0406016I	5
19	CTO.TAPA CAJA DE FILTRO TXT RACING 2012	BT90000093012	1
20	CTO.BASE ASIENTO CON ADH. RACING MY12	BT90000083012	1
21	FARO DELANTERO TRIAL 2009 SIN ADHESIVO / TRIAL 2009 FRONT HEADLIGHT NO STICKER	BT90500H2809	1
22	SOPORTE OPTICA FARO DELANTERO TRIAL / HEADLIGHT BRACKET	ET25000RC2808	1
23	REMACHE PLASTICO BLANCO GUARDAB. TRAS. / PLASTIC RIVET	T4513270	2
24	ADH. PROTECTOR ESCAPE AMIANTO / EXHAUST PROTECTOR STICKER	BT795502811	1
25	PUENTE HORQUILLA DELANTERA / FRONT SUSPENSION UNION	BT21500R3009	1
26	TORNILLO ESPECIAL 6X14 / 6X14 SPECIAL SCREW	T0206014	4
27	TORN ROSCA PLASTICO 3,6 X 10 ZINCADO	T36040101910B	2
28	GRAPA SUJECCION CABLE	ET750502809	2
29	TORNILLO ROSCA-CHAPA 3.5X13 / SCREW 3.5X13	T0603513	2
32	TUBO FLEXIBLE SILICONA BASE ASIENTO / SEAT BASE SILICON HOSE	BT795302811	1
33	ARANDELA 5X12X1'5 / WASHER 5X12X1'5	T4005012	4
35	CTO. FARO TXT RACING RAGA / RACING RAGA HEADLIGHT SET	BT9000006CT3012	1

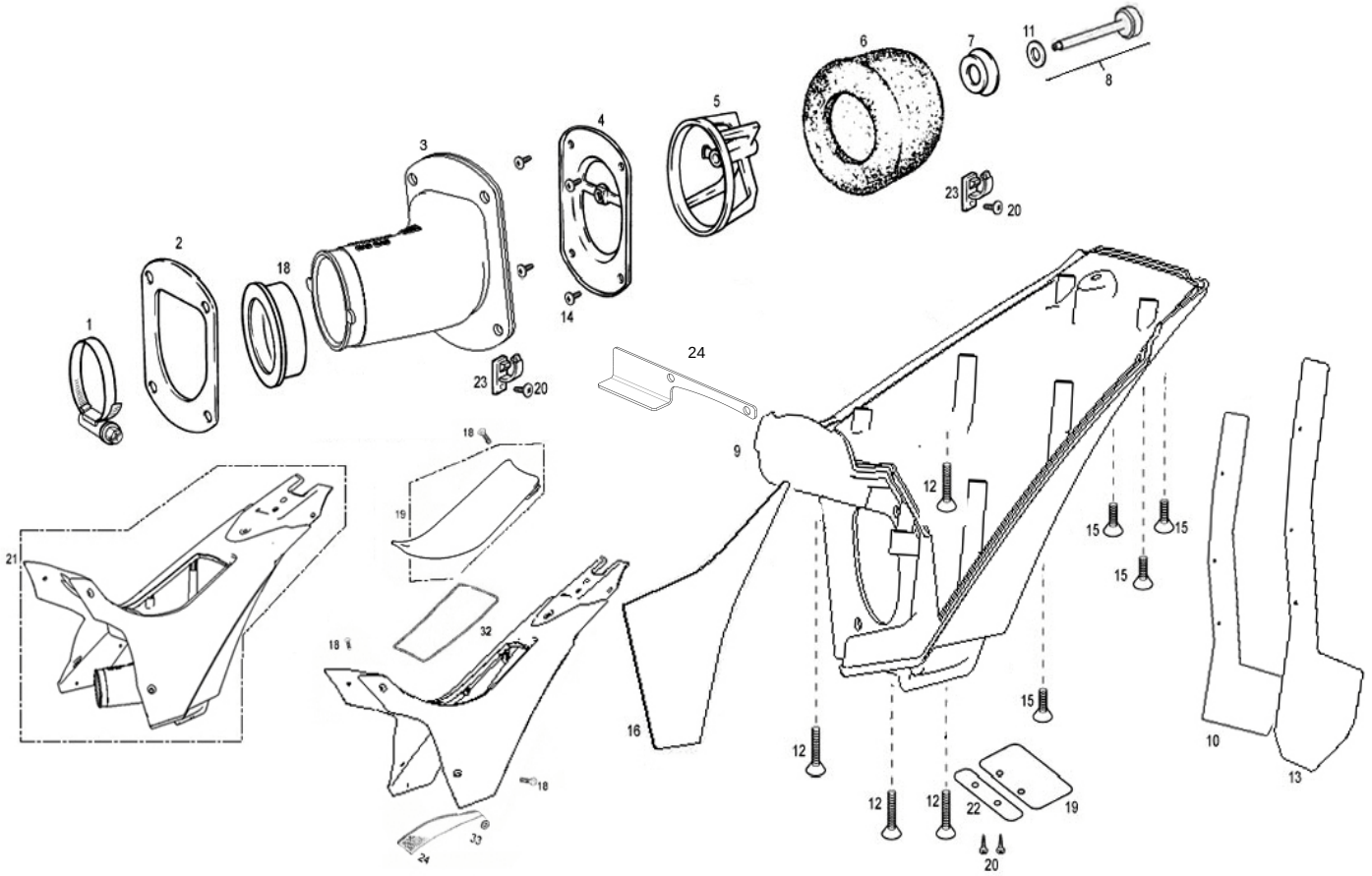
1
2
18
3
4
5
6
7
11
8
23
20
14
24
9
12
15
16
10
13
21
19
32
22

Nº	DESCRIPCION / DESCRIPTION	125 / 280 / 300	Cant.
1	ABRAZADERA S56/9 / CLAMP	MT280316132	1
2	PLATINA EXTERIOR SOPORTE JAULA FILTRO TRIAL 2002 / EXTERNAL PLATE	BT280228021	1
3	TOBERA CAJA FILTRO TRIAL SXXI / TUBE, AIR CLEANER CONNECT.	BT792002811	1
4	PLATINA INTERIOR SOPORTE JAULA FILTRO TRIAL 2002 / INNER PLATE	BT280228020	1
5	JAULA FILTRO AIRE TRIAL 280-2002 / AIR CLEANER CAGE	BT280228002	1
6	FILTRO AIRE TRIAL XXI / AIR CLEANER	BT280328000	1
7	TETÓN ESPUMA FILTRO TRIAL 2002 / AIR CLEANER WASHER	BT280228008	1
8	VARILLA FILTRO TRIAL 2002 / AIR CLEANER ROD	BT795202811	1
9	CAJA FILTRO TRIAL / AIR CLEANER BOX	BT790002811	1
10	AD. PROTECTOR CAJA FILTRO / AIR CLEANER PROTECTOR SITCKER	BT795502811	1
11	ARANDELA / WASHER	T4006016	1
12	TORNILLO ROSCA-CHAPA 3,5X30 / 3,5X30 SCREW THREAD	BT280228034	4
13	GOMA PROTECCIÓN CAJA FILTRO / AIR CLEANER BOX PROTECTOR RUBBER	BT795402811	1
14	ULS 4X10 NEGRO CON ABRAZADERA / ULS 4X10 BOLT	T0554010N	4
15	TORNILLO ROSCA-CHAPA 3,5X12 / 3,5X12 SCREW THREAD	BT280228035	4
16	ADH. PROTECTOR ESCAPE AMIANTO / EXHAUST PROTECTOR STICKER	BT795502811	1
18	ADAPTADOR CARBURADOR / CARBURETOR ADAPTER	MT300616133	1
19	VÁLVULA VACIADOR CAJA FILTRO TRIAL / TRIAL FILTER BOX VALVE	BT280428032	1
20	TORNILLO ROSCA-CHAPA 4,2X10 NEGRO / BLACK 4,2X10 SCREW	T0604210	4
21	CTO. CAJA FILTRO TRIAL PRO / PRO FILTER BOX SET	BT90000053012	1
22	PISADOR VÁLVULA VACIADOR CAJA FILTRO / BOX VALVE SUJECTION	BT280428045	1
23	PRENSACABLES SR1789 / CABLE TIE SR1789	BT280428006	2
24	PLETINA ENTRADA DE AIRE / AIR ENTER PLATE	BT30125R3011	1

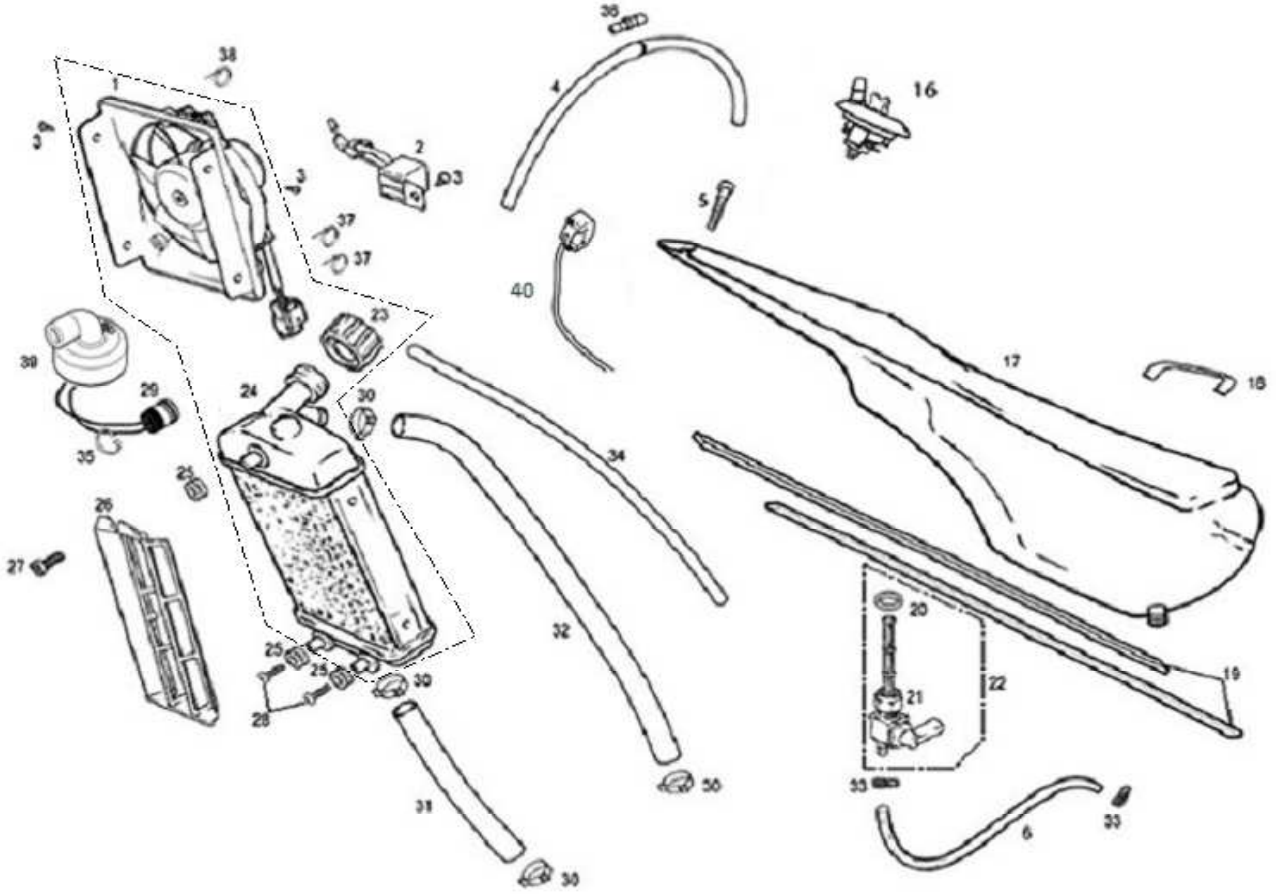

Nº	DESCRIPCION / DESCRIPTION	125 /280 / 300	Cant.
1	VENTILADOR F-14 / FUN F-14	BFS400332340	1
2	MODULO VENTILADOR / FUN MODULE	BT120532342	1
3	TORNILLO ROSCA CHAPA CON ARANDELA / SCREW THREAD WITH WASHER	T0604210	3
4	TUBO DESVAPORIZADOR DEPÓSITO 41cm. / TANK TUBE 41CM. LONG	BT280310018	1
5	TORNILLO M6X30 / SCREW M6X30	T0206030	1
6	TUBO GASOLINA TRIAL / FUEL HOSE	BT280236004	1
16	CTO. TAPÓN GASOLINA / CPT. PLUG FUEL-PETROL	BT280420010	1
17	CTO. DEPOSITO GASOLINA RACING CON ADHESIVO TXT 2012	BT80000013012	1
18	JUNTA ADHESIVA DEPÓSITO 125x10 / STICKER TANK GASKET	BT280038018	1
19	JUNTA ADHESIVA DEPÓSITO CHASIS 38 X 1 / STICKER TANK GASKET,FRAME	BT27838018	2
20	ARANDELA GRIFO DEPÓSITO / WASHER TANK TAP	BT27910131	1
21	TUERCA GRIFO DEPÓSITO / NUT TANK TAP	BT27910132	1
22	GRIFO GASOLINA C/90 / FUEL VALVE	BT27810031	1
23	TAPÓN RADIADOR TP50806 TRIAL 2002 / RADIATOR CAP	BT280232032	1
24	CTO. RADIADOR CON VENTILADOR TRIAL PRO / TRIAL PRO RADIATOR	BT70000RCT3009	1
25	GOMAS RADIADOR A CHASIS / RADIATOR TUBE TO FRAME	G220000	3
26	REJILLA RADIADOR TRIAL / RADIATOR PROTECTOR	BT730502809	1
27	ALLEN 6X14 / 6X14 ALLEN BOLT	T0306014	1
28	ULS 6x10 CON ARANDELA / 6X10 ULS BOLT WITH WASHER	T0556010	2
29	TERMO CONTACTO / TERMO-CONTACT	BT280432065	1
30	ABRAZADERA COBRA DE 21 / COBRA CLAMP 21	L200046	4
31	TUBO INFERIOR RADIADOR-BOMBA AGUA / RADIATOR-WATER PUMP LOWER TUBE	BT710002810	1
32	TUBO SUPERIOR RADIADOR-CULATA / RADIATOR-CYL. HEAD UPPER TUBE	BT710502810	1
33	ABRAZADERA ELÁSTICA NEGRA ALAMBRE 9.3X9.9 2016055 / SPRING CLAMP	L200036	2
34	TUBO DESVAPORIZADOR TAPÓN GAS (26cm) / RADIATOR EXCESS TUBE HOSE	BE25620011	1
35	CLIP TERMOSTATO PRO 2005 / SEEGER	BT280432066	1
36	VÁLVULA DESVAP. DEPÓSITO / UNSTEAMER VALVE	BT27836025	1
37	BRIDA UNEX CORTA 2.5X98 / UNEX CALMP	BE25634010	2
38	BRIDA UNEX 2244 4.8X20 / UNEX CLAMP	BE25634009	1
39	FUNDA TERMOCONTACTO / THERMOCONTACT COVER	BT70110R3009	1
40	INTERRUPTOR CDI / CDI SWITCH	ET511902810	1

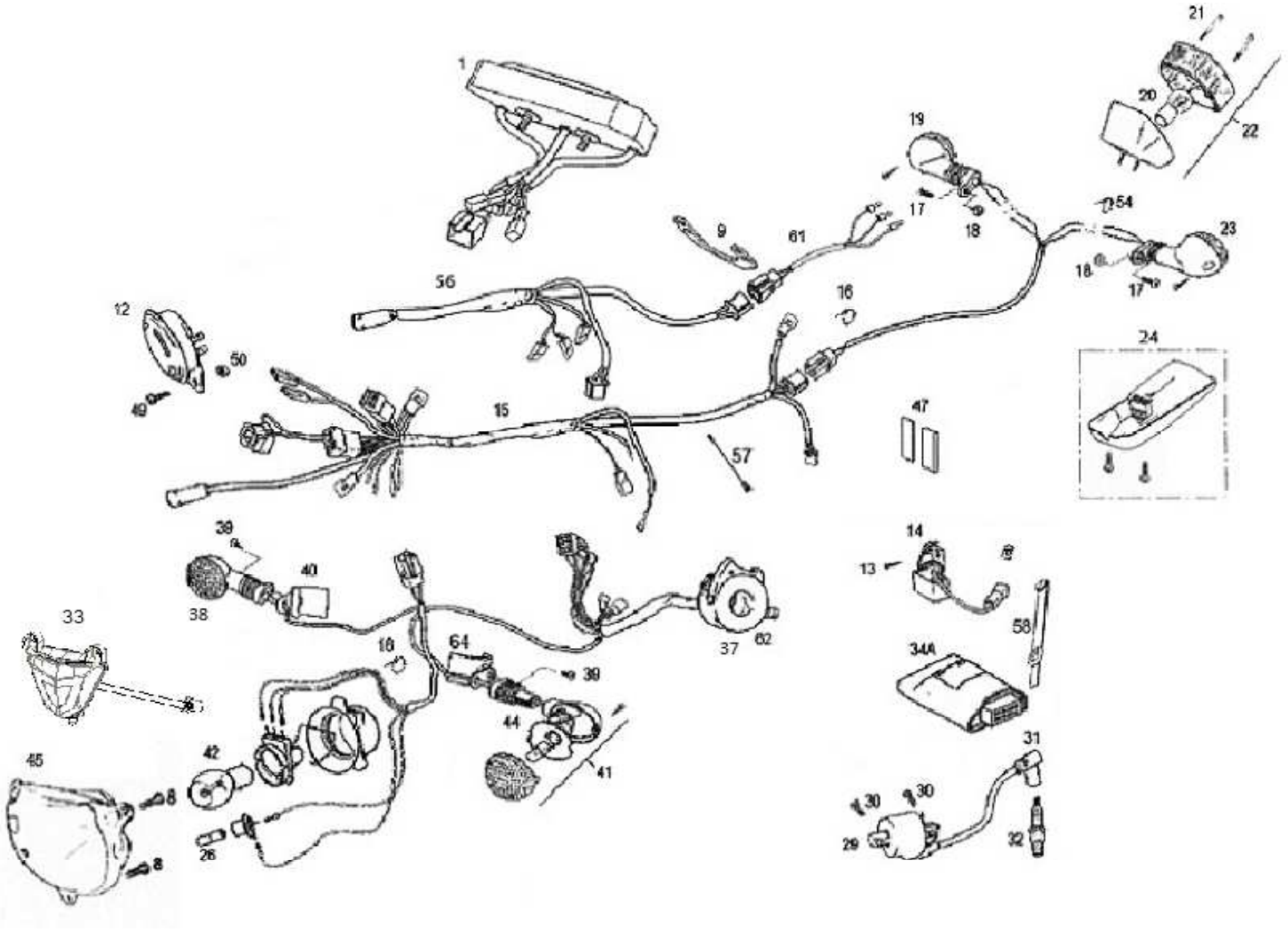
1
9
61
19
17
18
21
20
22
54
23
18
17
56
16
12
50
49
15
57
47
24
39
40
38
33
18
64
39
37
62
44
41
45
42
8
8
26
14
13
58
34A
31
30
30
29
32

Nº	DESCRIPCION / DESCRIPTION	125	125 / 280 /300	Cant.
1	MULTIFUNCIÓN TRIAL / TRIAL MULTIFUNCTION		ET600002808	1
7	BOMBILLA 12V 1,2-9W / 12V 1,2-9W BULB		L300123	3
9	SOPORTE CUENTA KM. / KM. COUNTER SUPPORT		BT280634045	1
12	CTO. CLAXON PE40065G11 / HORN ASSY		L300105	1
13	TORNILLO ESPECIAL 6X14 / 6X14 SPECIAL SCREW		T0206014	1
14	REGULADOR ALTERNADOR / ALTERNATOR REGULATOR		L300031	1
15	INSTALACIÓN TRIAL / TRIAL INSTALLATION		ET10000RC2808	1
15A	INSTALACIÓN HOMOLOGADA / HOMOLOGATED INSTALLATION		ET10000003012	1
16	BRIDA UNEX MEDIANA / UNEX CLAMP		BE25634009	3
17	ULS 6X16 NEGRO / 6X16 ULS BLACK BOLT		T0506016N	2
18	TUERCA CON ARANDELA M6 / M6 NUT WITH WASHER		T2206000	2
19	INTERMITENTE DERECHO TRASERO / RIGHT REAR INDICATOR		BT280634018	1
20	BOMBILLA 12V 5-21W / 12V 5-21W BULB		L300116	1
21	CRISTAL FARO TRASERO HOMOLOGADO / HOMOL. REAR LIGHT CAP		BP25734115	1
22	FARO PILOTO TRIAL HOMOLOGADO / HOMOL. TRIAL REAR LIGHT SET		BP27534015	1
23	INTERMITENTE IZQUIERDO TRASERO / LEFT REAR INDICATOR		BT280634019	1
24	FARO PILOTO TRIAL / TRIAL REAR LIGHT SET		ET30000CT2811	1
25	TORNILLO ROSCA CHAPA 3.5X13 / BOLT 3.5X13		T0603513	3
26	LÁMPARA 12V3W BIFARO AM0518 / 12V 3W LAMP		L300119	1
27	TIRA ADHESIVA 45MM. CAJA FILTRO EC2003 / STICKER 45MM.		BE250328039	2
29	BOBINA KOKUSAN IG3815 / KOKUSAN ELECTRIC COIL		ET500002809	1
30	ALLEN 6X16 / ALLEN 6X16 BOLT		T0306016	3
31	PIPA BUJÍA IB05EMH = BT27934000 / SPARK PLUG		BT25934000	1
32	BUJÍA BPR5ES / SPARK PLUG		M04012000	1
33	CTO. OPTICA RACING RAGA 2011		BT90000123011	1
34A	CDI DIGITAL CU7510 TRIAL 250/280 2005 / TRIAL 2005 DIGITAL CDI	MT120534007	MT280534007 (280,300)	1
37	CONMUTADOR LUZ TT-97 / LIGHT SWITCH		ET10000013012	1
38	INTERMITENTE DERECHO DELANTERO / FRONT RIGHT INDICATOR		BT28063401812	1
39	TORNILLO PHILIPS ROSCA-CHAPA 6.3x16 NEGRO / 6.3X16 CLACK SCREW		T0706316	2
40	SOPORTE INTERMITENTE DELANTERO / FRONT INDICATOR SUPPORT		BE250134017	2

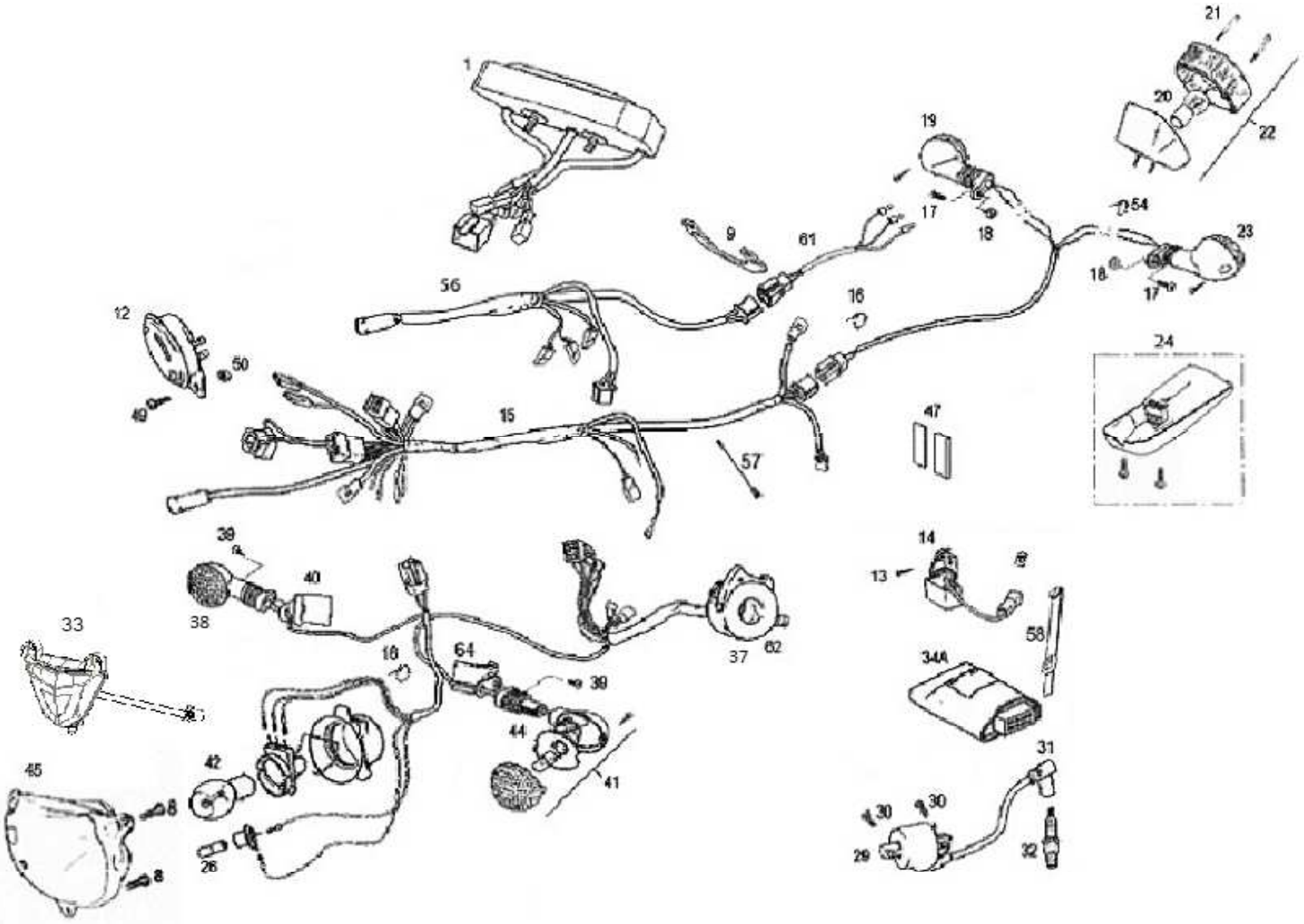
1
9
61
56
12
50
49
15
57
16
17
18
19
54
23
18
17
21
20
22
24
47
39
40
38
33
18
64
39
44
41
37
62
14
13
58
34A
31
30
30
29
32
45
42
8
8
26

Nº	DESCRIPCION / DESCRIPTION	125 / 280 /300	Cant.
41	INTERMITENTE IZQUIERDO DELANTERO / FRONT LEFT INDICATOR	BT28063401912	1
42	BOMBILLA 12V 35W/35 (1221) / 12V 35W/35 LAMP	L300122	4
44	LÁMPARA 12V15W CASQUETE / 12V15W LAMP	L300115	4
45	ÓPTICA FARO HOMOLOGADO / HEADLIGHT	BT280120022	1
47	ESPUMA PROTECTORA CDI KOKUSAN TRIAL PRO 2005 / CDI PROTECTOR	MT280534023	2
49	ULS 6X10 C/ARANDELA PLATA / ULS 6X10 BOLT	T0556010	1
50	TUERCA AUTOBLOCANTE BAJA M6 (DIN985) / M6 NUT	T2106001	1
54	BRIDA NYLON 3.6X140 LAT.EMBRAGUE / ALLEN BOLT 6X14	BE250022031	1
56	INSTALACIÓN RACING TRIAL / TRIAL RACING INSTALLATION	ET10000RC2808	1
57	ALARGO CONECTOR BOBINA / BOBINE WIRE EXTENSION	ET501002809	1
58	GOMA SUJECCION CDI /	BE250034100	1
61	INST. ALARGO PILOTO TRASERO TRIAL / INSTALLATION	ET300102808	1
62	CONMUTADOR LUZ 2 POSICIONES	ET602002808	1
63	CAJA INTERMITENCIA	L300720	1
64	SOPORTE INTEMITENCIA IZQUIERDO	BE250134020	1

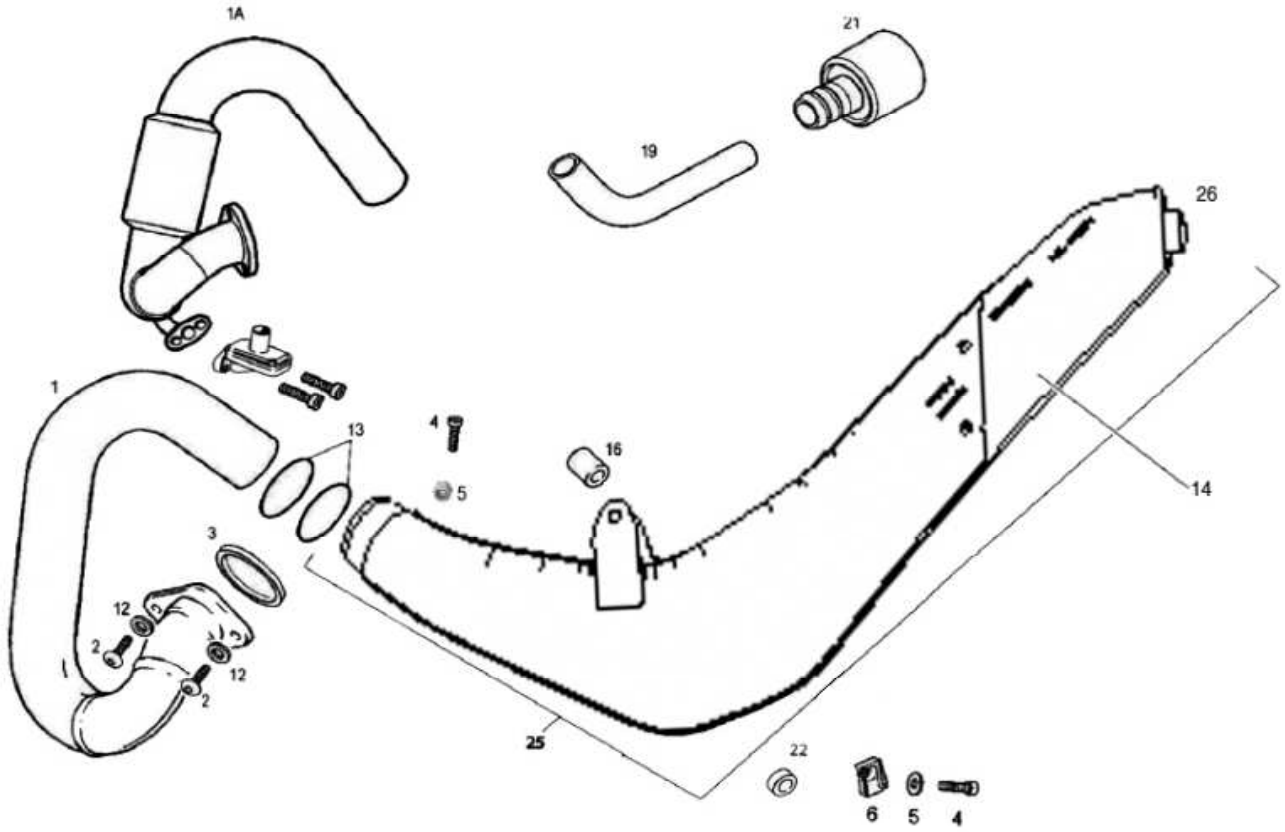
1A
21
19
26
1
13
4
16
5
14
3
12
2
12
2
25
22
6
5
4

Nº	DESCRIPCION / DESCRIPTION	125 / 280 / 300	Cant.
1	CURVA ESCAPE TRIAL SXXI / TRIAL BEND EXHAUST SXXI	BT300726001RA	1
1A	CURVA ESCAPE HOMOLOGADA / HOMOLOGATED BEND EXHAUST	BT280626001H	1
2	ULS 8X16 / 8X16 ULS	T0508016	2
3	JUNTA ESCAPE S4 105 / EXHAUST GASKET	MT280244012	1
4	TORNILLO ESP. 6X14 / SPECIAL SCREW 6X14	T0206014	1
5	TUERCA CON ARAND. ESTRIADA M6 / M6 NUT WITH WASHER	T2206000	1
12	ARANDELA GROVER 8X12X2 / GROVER WASHER	T4008314	2
13	TÓRICA SILENCIOSO INTERMEDIO 44,05X3,53 / O'RING INT. SILENCER	C290000	2
14	CAZOLETA SILENCIOSO FINAL / FINAL EXHAUST COVER	BT870802811	1
16	CASQUILLO SEPARADOR MOTOR EC125 / BUSHING	BE120110065	1
19	TUBO AIRE SECUNDARIO DE ESCAPE A VÁLVULA / SECONDARY AIR HOSE FROM EXHAUST TO VALVE	BT280626061	1
21	FILTRO AIRE SECUNDARIO / SECONDARY AIR FILTER	BT280626059	1
22	CASQUILLO INF. ESCAPE TRIAL / LOWER EXHAUST BUSHING TRIAL	BT280226240	1
23	ABRAZADERA 8X15 / 8X15 CLIP	BQ300214157	4
24	ULS 6X14 ARANDELA INC./ WASHER INC ULS 6X14	T0556014	2
25	CTO. INTERM. Y FINAL / INTERMEDIATE AND FINAL SET	BT860002811	1
26	SALIDA ALUMINIO FINAL ESCAPE	BT870602811	1

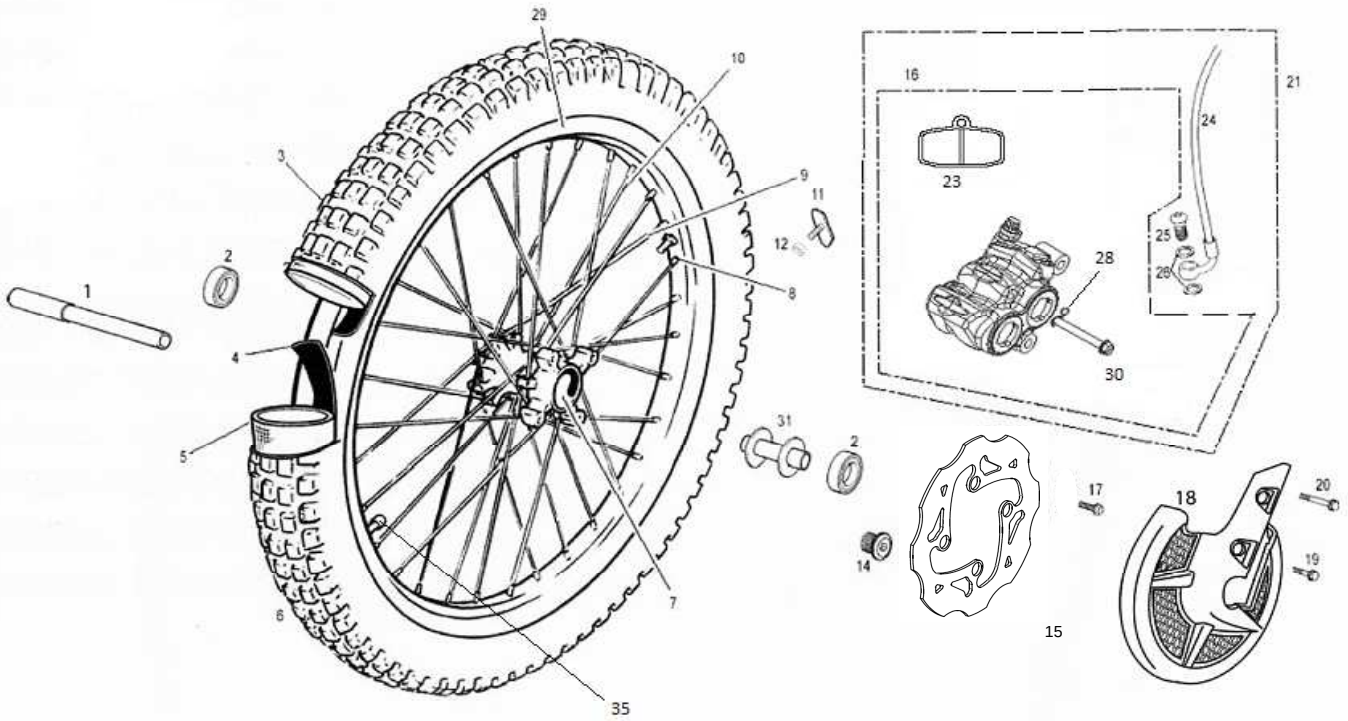
29
10
3
9
11
12
8
1
2
4
5
6
7
35
16
21
24
23
25
26
28
30
31
2
14
17
18
20
19
15

Nº	DESCRIPCION / DESCRIPTION	125 / 280 / 300	Cant.
1	EJE RUEDA DELANTERA TRIAL PRO 2004 / FRONT WHEEL AXLE	BT53000R3009	1
2	COJINETE / BEARING	ME120136055	2
3	CUBIERTA DELANTERA 2.75X21 / FRONT TYRE	BT501002810	1
4	GOMA PROTECTOR R14025 2.75X21 REF. 554350 / FRONT FLAP TYRE	N100000	1
5	CÁMARA DELANTERA 2.75X21 REF. 450905 / FRONT TUBE	N120000	1
6	CTO. RUEDA DEL. TXT RACING 2012 NEGRA	BT50000023012	1
7	CUBO RUEDA DELANTERA TRIAL / FRONT HUB WHEEL	BT280418007	1
8	TUERCA RADIOS 3MM. RUEDA DELANTERA DIA. 6.5 / SPOKE NUT	BT27718001	32
9	RADIO 3X257 RUEDA DELANTERA TRIAL NEGRO / BLACK FRONT WHEEL SPOKE	BT54200N2809	32
11	AGARRE CUBIERTA / TYRE CLAMP	BE25618027	1
12	TUERCA CON ARANDELA ESTRIADA M8 ZINCADA / NUT WITH WASHER	BE25818060	1
14	TORNILLO EJE RUEDA DEL. TRIAL PRO 2004 / FRONT WHEEL AXLE SCREW	BT53010R3009	1
15	DISCO FRENO DEL. TXT RACING DF740W	BT52000R3010	1
16	PINZA FRENO DELANTERO / FRONT BRAKE PADS	BT60000013012	1
17	HEXAGONAL M8 CON ARANDELA / M8 HEXAGONAL SCREW WITH WASHER	T0206020	4
18	PROTECTOR DISCO FRENO / FRONT BRAKE DISK PROTECTOR	BT90000063012CT	1
19	TORNILLO PINZA FRENO DELANTERA INFERIOR 8X1.25X36.5 / SCREW	BT280022071	1
20	TORNILLO PINZA FRENO DELANTERA SUPERIOR 8X45 / SCREW	BT35000023012	1
21	CTO. FRENO DELANTERO TRIAL / FRONT BRAKE SET	BT60000003012	1
23	PASTILLA FRENO DELANTERA / FRONT BRAKE PAD	BT60000063012	1
24	LATIGUILLO FRENO DELANTERO / FRONT BRAKE TUBE	BT60000023012	1
25	RACOR LATIGUILLO FRENO D8	BT662002811	1
26	ARANDELA RACOR D8X12X1.5 / D8X12X1.5 WASHER	BT662102811	2
28	PASADOR SEGURIDAD TORNILLO SUJETA PASTILLAS FRENO	BT60000073012	1
29	LLANTA DELANTERA COLOR TITANIO /TITAN COLOR FRONT WHEEL RIM	BT540002811	1
30	TORNILLO SUJECCION PASTILLAS / BRAKE PADS SCREW	BT35000053012	1
31	CASQUILLO INTERIOR BUJE / BUSHING	BT280418051	1
34	CTO. LLANTA DELANTERA RADIADA	BT54000CT2811	1
35	JUEGO TAPONES SILICONA VALVULA TRIAL ROJOS	BT53500R3009	1

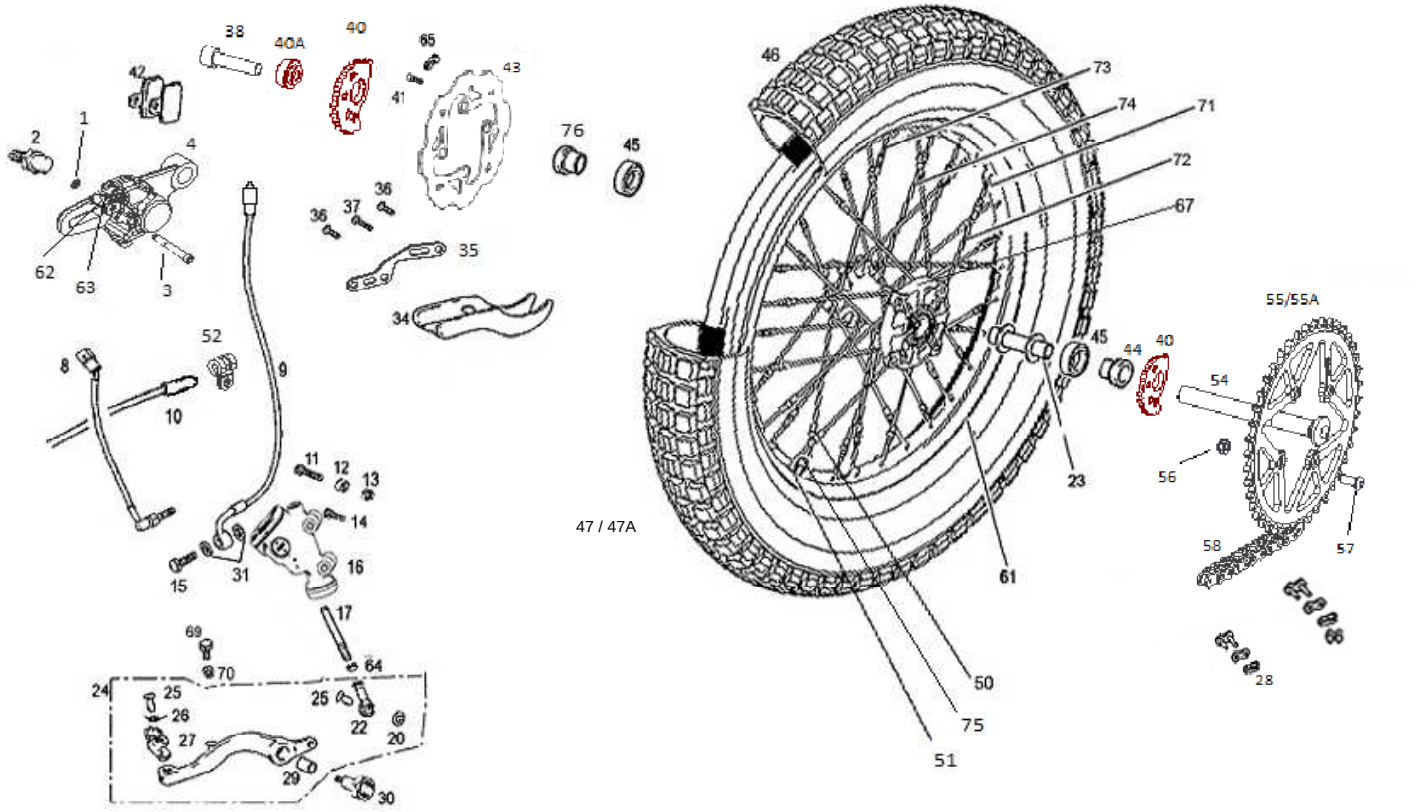
38
40A
40
65
43
41
42
1
2
4
62
63
3
76
45
36
37
36
35
34
52
8
9
10
11
12
13
14
15
31
16
17
69
70
64
24
25
26
27
29
30
25
22
20
46
73
74
71
72
67
47 / 47A
61
50
75
51
45
44
40
23
55/55A
54
56
58
57
28

Nº	DESCRIPCION / DESCRIPTION	125 /280 / 300	Cant.
1	CIRCLICK TORNILLO EJE PASTILLAS FRENO TRAS	SE05050070001	1
2	TORNILLO CENTRADOR PINZA / CALIPER CENTER SCREW	BT280222049	1
3	TORNILLO EJE PASTILLAS FRENO TRAS	BT35000043012	1
4	PINZA FRENO TRASERA / CALIPER BRAKE REAR	BT65000013012	1
8	INTERRUPTOR STOP HOMOLOGADO / STOP INTERRUPTOR HOMOL.	BT65000033012	1
9	LATIGUILLO FRENO TRASERO / REAR BRAKE HOSE	BT65000003012	1
10	REENVÍO / HALL SENSOR	BT280634050	1
11	TORNILLO 6X25 / 6X25 BOLT	T0206025	1
12	CASQUILLO SEPARADOR FRENO TRASERA / REAR BRAKE PUMP SPACER	BT280226240	1
13	TUERCA CON ARANDELA M6 (DIN 6923) ESTRIADA / M6 NUT WITH WASHER	T2206000	2
14	TORNILLO ESPECIAL 6X14 / 6X14 SPECIAL SCREW	T0206014	1
15	RACOR LATIGUILLO FRENO D8	BT662002811	1
16	BOMBA FRENO TRASERO / REAR BRAKE PUMP	BT660002811	1
17	VARILLA FRENO TRASERA TRIAL 2002 / BRAKE ROD	BT280222062	1
20	ARANDELA PLANA 6X12X1.5 / WASHER 6X12X1.5	T4006012	1
22	RÓTULA PEDAL FRENO / BRAKE PEDAL BALL-AND-SOCKET JOINT	BT280222053	1
23	CASQUILLO SEPARADOR 390.80.221 / BUSHING	BT280218052	1
24	CTO. PEDAL FRENO TRASERO / REAR BRAKE PEDAL SET	BT13000CT2809	1
25	REMACHE PUNTERA PEDAL FRENO / BRAKE PEDAL END RIVET	BE25922018	1
26	MUELLE PUNTERA PEDAL / SPRING PEDAL, END GEAR CLEVER	ME25636029	1
27	PUNTERA PEDAL FRENO / TOE PEDAL BRAKE	BT27922017	2
28	ENGANCHE CADENA IRIS 520 RXL / CHAIN SPLIT LINK	BT280310066	1
29	GLACIER PEDAL FRENO 1215PD10 / GLACIER BRAKE PEDAL	C200101	1
30	CASQUILLO TORNILLO PEDAL FRENO TRIAL / SCREW BUSHING	BT280610302	1
31	ARANDELA RACOR D8X12X1.5	BT662102811	2

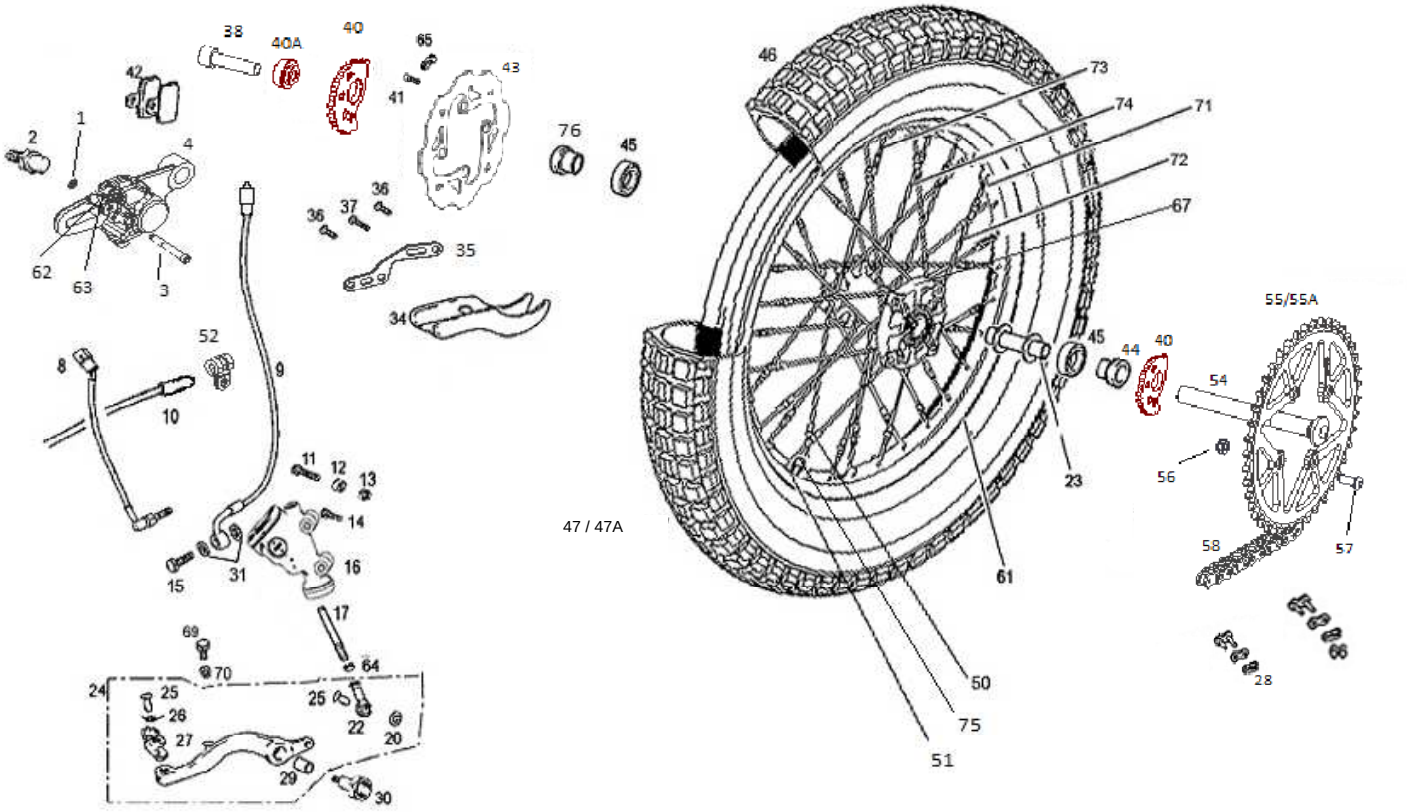
38
40A
40
65
43
41
42
1
2
4
76
45
36
37
36
35
62
63
3
34
52
8
9
10
11
12
13
14
15
31
16
17
69
70
64
24
25
26
27
29
30
25
22
20
46
73
74
71
72
67
47 / 47A
55/55A
45
44
40
54
56
23
58
57
61
50
75
51
28

Nº	DESCRIPCION / DESCRIPTION	125 /280 / 300	Cant.
34	PROTECTOR DISCO TRASERO 2001 / BRAKE DISC PROTECTOR	BT57050R3009	1
35	SOPORTE PROTECTOR DISCO TRASERO / BRAKE DISC PROTECTOR SUPPORT	BT65000023012	1
36	TORNILLO ULS 6X12 / SCREW 6X12 ULS	T0506012	2
37	TORNILLO ULS 6X25 / SCREW 6X25 ULS	T0506025	1
38	TORNILLO EJE RUEDA TRASERA / REAR WHEEL AXLE BOLT	BT280718023	2
39	ARANDELA EJE TRASERO 17X30X1,5 DIN 137 / REAR WASHER	BT280436014	1
40	EXCENTRICA EJE RUEDA POSTERIOR	BT55000013011	2
40A	CASQUILLO EXCENTRICA EJE RUEDA POSTERIOR	BT55000023011	1
41	TORNILLO 6X18 / 6X18 SCREW	T0206020	4
42	PASTILLAS FRENO TRASERA / REAR BRAKE PADS	BT280222068	1
43	DISCO FRENO TRAS. TXT RACING DF741W	BT57000R3010	1
44	DISTANCIADOR RUEDA TRAS.LADO CORONA 15.3	BT55000013012	1
45	COJINETE 6004 / BEARING	C160001	2
46	CUBIERTA TRASERA 400X18 TBLS / REAR WHEEL TYRE	BT551002810	1
47	CTO. RUEDA TRAS.RACING TXT 2012	BT55000053012	1
47A	CTO. RUEDA TRAS.RACING MY12 USA	BT55000023012	1
50	TENSOR RADIO / SPOKE NUT	BT592032809	32
51	VÁLVULA / AIR VALVE	N200110	1
52	ABRAZADERA INOX.FIJ.LATIGUILLO 8x15	BQ300214157	1
54	EJE RUEDA POSTERIOR TRIAL	BT280718020	1
55	CORONA TITANIO Z41 / SPROCKET TITANIUM Z41	BT573002810	1
55A	CORONA TITANIO Z42 / SPROCKET TITANIUM Z42	BT573003010	1
56	TUERCA AUTOBLOCANTE M8 BAJA / LOW SELF-LOCK NUT	T2108001	4
57	ULS 8X20 TORX / 8X20 ULS TORX	T0568022	4
58	CADENA TRIAL / TRIAL CHAIN	BT280310036	1
58A	CADENA TRIAL 520 RXL 104 PASOS / CHAIN	BT120210036	1

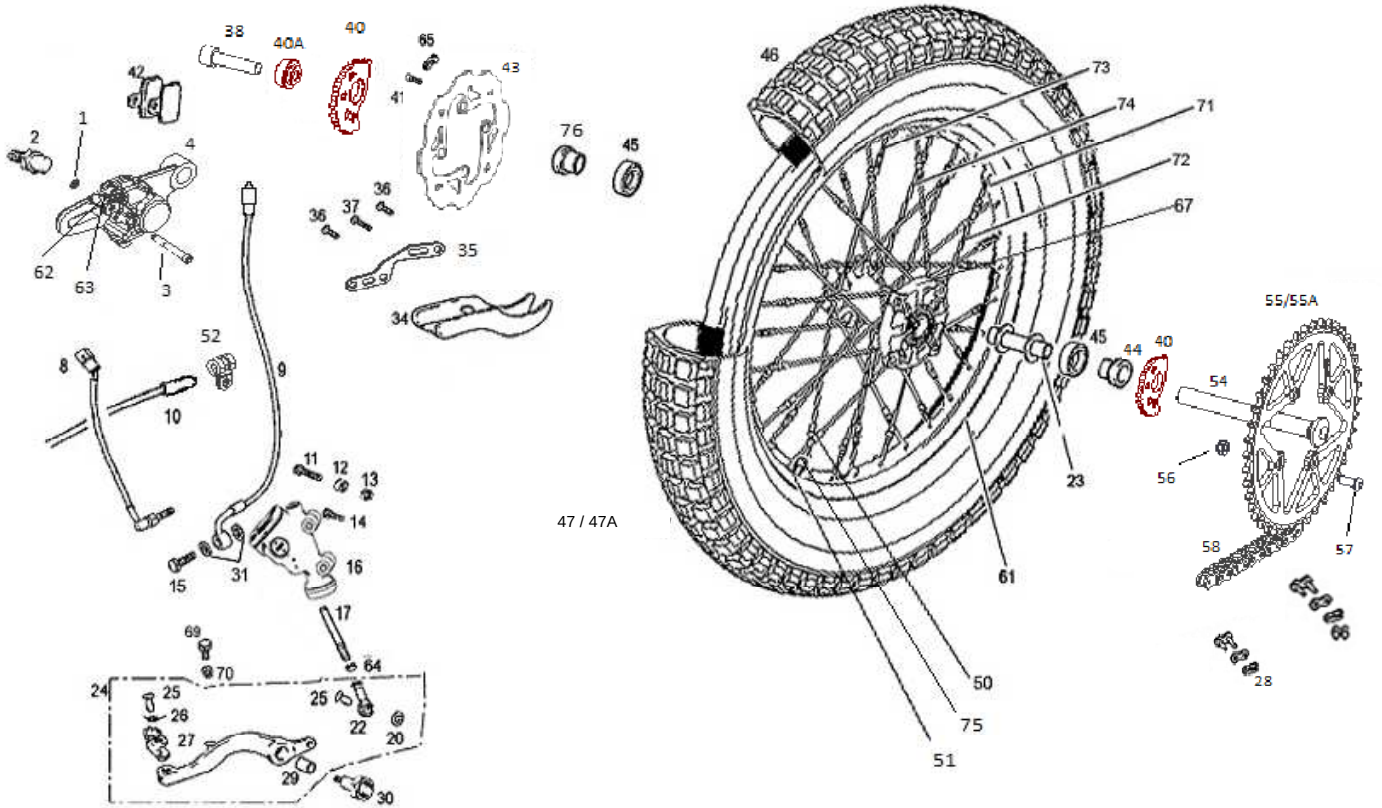
38
40A
40
65
43
41
42
1
2
4
62
63
3
76
45
36
37
36
35
34
52
8
9
10
11
12
13
14
15
31
16
17
69
70
64
24
25
26
27
29
30
25
22
20
47 / 47A
46
73
74
71
72
67
45
44
40
23
61
50
75
51
55/55A
54
56
58
57
28

Nº	DESCRIPCION / DESCRIPTION	125 / 280 / 300	Cant.
59	FLAP LLANTA TRASERA / REAR RIM FLAP	BT551502808	1
60	CTO. LLANTA TRASERA RADIADA /	BT59000RCT3010	1
61	LLANTA RUEDA TRASERA / REAR WHEEL RIM	BT590002811	1
62	SANGRADOR / BLEEDER	BT65000063012	1
63	TAPÓN SANGRADOR / BLEEDER CAP	BT65000073012	1
64	TUERCA M6 BAJA DIN 934 / M6 NUT	T2006001	1
65	IMÁN 2221-0 2.5X98 / MAGNET	BT280234012	1
66	MEDIA MALLA IRIS 520 RXL / IRIS 520 RXL AVERAGE MESH	BT280310067	1
67	CUBO RUEDA TRASERA / REAR WHEEL HUB	BT280218027	1
69	TORNILLO HEXAGONAL 5X10 // HEXAGONAL SCREW M5X10	T0105010	1
70	TUERCA M5 / NUT M5 NORMAL	T2005000	1
71	RADIO IZQUIERDO CORTO	BT59212R3009	16
72	RADIO IZQUIERDO LARGO	BT59211R3009	16
73	RADIO DERECHO CORTO	BT59202R3009	16
74	RADIO DERECHO LARGO	BT59201R3009	16
75	JUEGO TAPONES SILICONA VALVULA TRIAL ROJOS	BT555002808R	1
76	SEPARADOR RUEDA TRAS LADO DISCO 19,9	BT55000003012	1

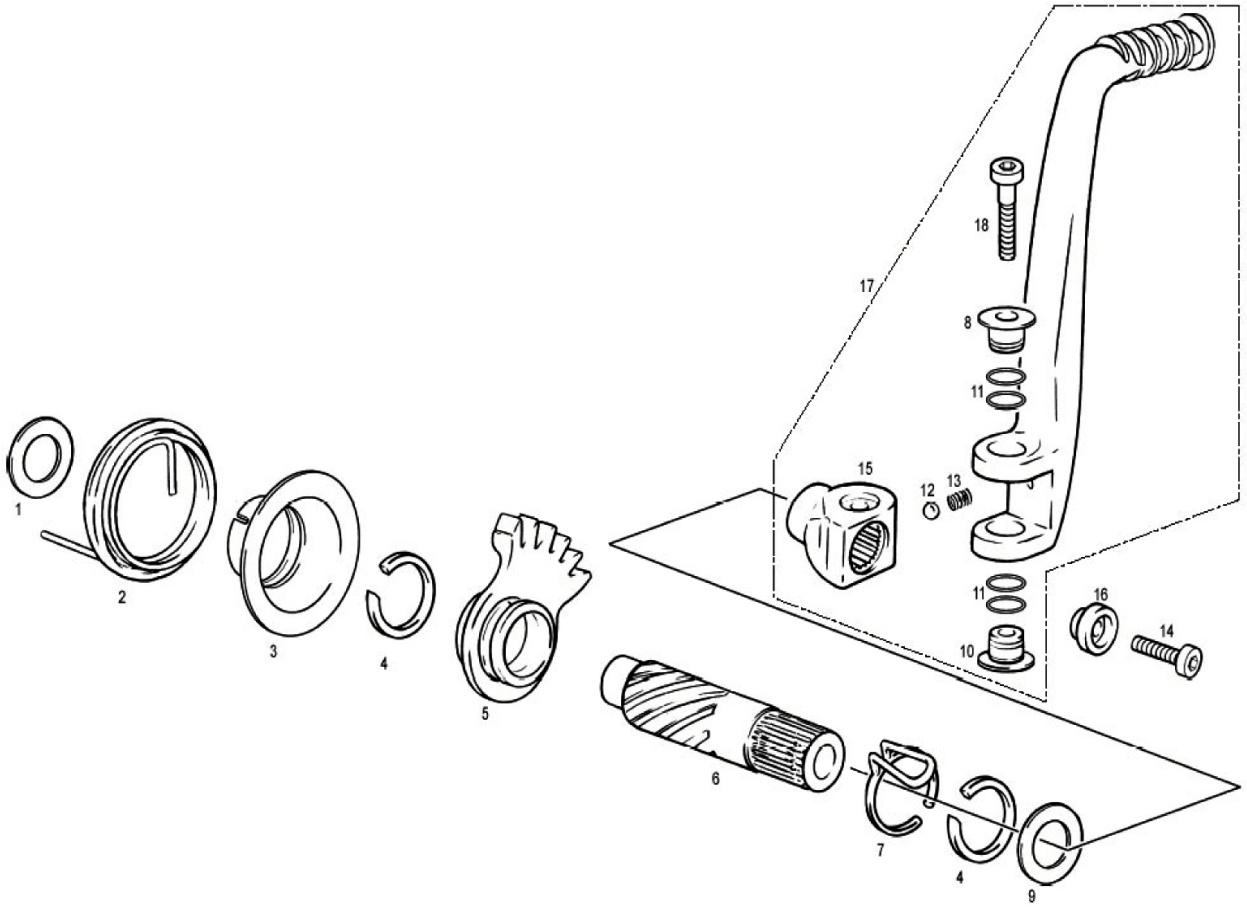
1
2
3
4
5
6
7
4
9
10
11
11
12
13
14
15
16
17
18
8

Nº	DESCRIPCION / DESCRIPTION	125 / 280 / 300	Cant.
1	ARANDELA 14X25X0,5 / 14X25X0,5 WASHER	T4001425	1
2	MUELLE ARRANQUE TRIAL / PEDAL KICKSTART SPRING	MT280226007	1
3	CENTRADOR MUELLE ARRANQUE / KICKSTART SPRING BUSHING	MT280226053	1
4	CIRCLIP EJE 18 MM / AXIS CIRCLIP	MT280226017	2
5	PIÑÓN ARRANQUE TRIAL 2002 / KICKSTART GEAR	MT280226002	1
6	EJE ARRANQUE TRIAL / KICKSTARTER SHAFT	MT890102811	1
7	MUELLE FRICCIÓN ARRANQUE / FRICTION KICKSTART SPRING	MT280226006	1
8	CASQUILLO PEDAL ARRANQUE / KICKSTART PEDAL BUSHING	MT280226066	1
9	ARANDELA 18,2X24X0,5 / 18,2X24X0,5 WASHER	T4001824	1
10	TUERCA PEDAL ARRANQUE / KICKSTART PEDAL NUT	MT280226065	1
11	TÓRICA NBR 12X1 / NBR O'RING	MT280226063	4
12	BOLA MUÑEQUILLA PEDAL / KICKSTART PEDAL BALL	ME250036062	1
13	MUELLE MUÑEQUILLA PEDAL / KICKSTART PEDAL SPRING	ME250036066	1
14	TORNILLO UFK M6X25 / M6X25 UFK SCREW	T0316025	1
15	MUÑEQUILLA PEDAL ARRANQUE / KICKSTART PEDAL BASE	MT280226061	1
16	CASQUILLO SUJECIÓN PEDAL / KICKSTART PEDAL BUSHING	MT280226068	1
17	CTO. PEDAL ARRANQUE TRIAL 2004 / KICKSTART PEDAL COMPLETE	MT280626060	1
18	ALLEN M6X35 / M6X35 ALLEN BOLT	T0306035	1

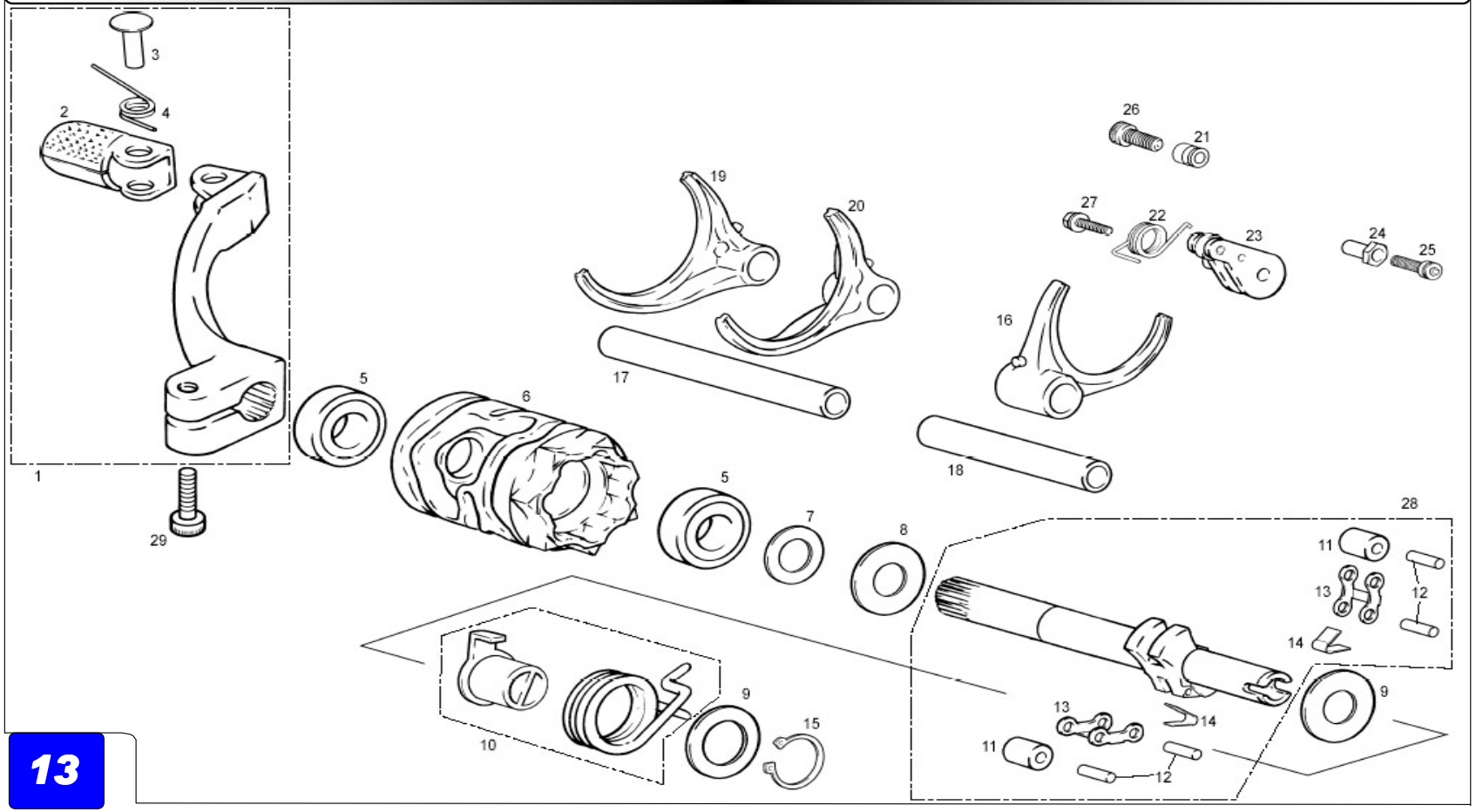
3
2
4
1
29
5
6
19
20
17
26
21
27
22
23
24
25
16
18
5
7
8
28
11
13
12
14
9
10
15
13
14
11
12
9

Nº	DESCRIPCION / DESCRIPTION	125 / 280 / 300	Cant.
1	CTO. PEDAL CAMBIO / GEAR PEDAL COMPLETE	MT280238026	1
2	PUNTERA PEDAL CAMBIO / GEAR PEDAL END	ME25636027	1
3	REMACHE PUNTERA CAMBIO / RIVOT PEDAL END	ME25636030	1
4	MUELLE PUNTERA PEDAL CAMBIO / PEDAL END SPRING	M121000	1
5	COJINETE 12X24X6 2Z DESMO / 12X24X6 2Z DESMO BEARING	MT280238032	2
6	DESMODRÓMICO / SHIFT DRUM	MT280238031	1
7	ARANDELA 12,2X18X0,5 / 12,2X18X0,5 WASHER	T4001218	1
8	ARANDELA 12,2X24X0,5 / 12,2X24X0,5 WASHER	T4001224	1
9	ARANDELA 10,2X24X0,5 / 10,2X24X0,5 WASHER	T4011024	2
10	POSICIONADOR Y MUELLE EJE SELECTOR / SHIFT SHAFT CENTER LOCATOR AND SPRING	MT280238037CT	1
11	RODILLO TRINQUETE SELECTOR / RATCHET ROLLER	MT280238040	2
12	AGUJA 3X13,8 / 3X13,8 NEEDLE	MT280238048	4
13	TRINQUETE SELECTOR / RATCHET ARM SELECTOR	MT280238036	2
14	MUELLE TRINQUETE SELECTOR / RATCHET SEL. SPRING	MT280238039	2
15	CIRCLIP E10 EJE / E10 SHAFT CIRCLIP	M03314011	1
16	HORQUILLA PRIMARIA / SHIFT FORK PRIMARY	MT280238009	1
17	EJE HORQUILLA LARGO / LONG FORK SHAFT	MT280238044	1
18	EJE HORQUILLA CORTO / SHORT FORK SHAFT	MT280238045	1
19	HORQUILLA 2-4-5-6 / 2-4-5-6 FORK	MT280238007	1
20	HORQUILLA 1-3 / 1-3 FORK	MT280238008	1
21	TOPE MUELLE FIJADOR / SPRING REST POST	MT280238049	1
22	MUELLE FIJADOR MARCHAS / GEAR SELECTOR SPRING	MT280238034	1
23	FIJADOR MARCHAS / GEAR SELECTOR ARM AND ROLLER	MT280238033	1
24	TOPE MUELLE EJE SELECTOR / SELECTOR SPRING TOP SHAFT	MT280238050	1
25	ALLEN 5X25 DACROMET / 5X25 DACROMET ALLEN BOLT	T0305025	1
26	ALLEN 5X20 / 5X20 ALLEN	T0305020	1
27	HEXAGONAL 5X25 CON ARANDELA / HEXAGONAL BOLT WITH WASHER	BT280010086	1
28	CONJUNTO EJE SELCTOR / SHIFT SHAFT SET	MT280238043	1
29	ALLEN 5X15 / 5X15 ALLEN	T0305015	1

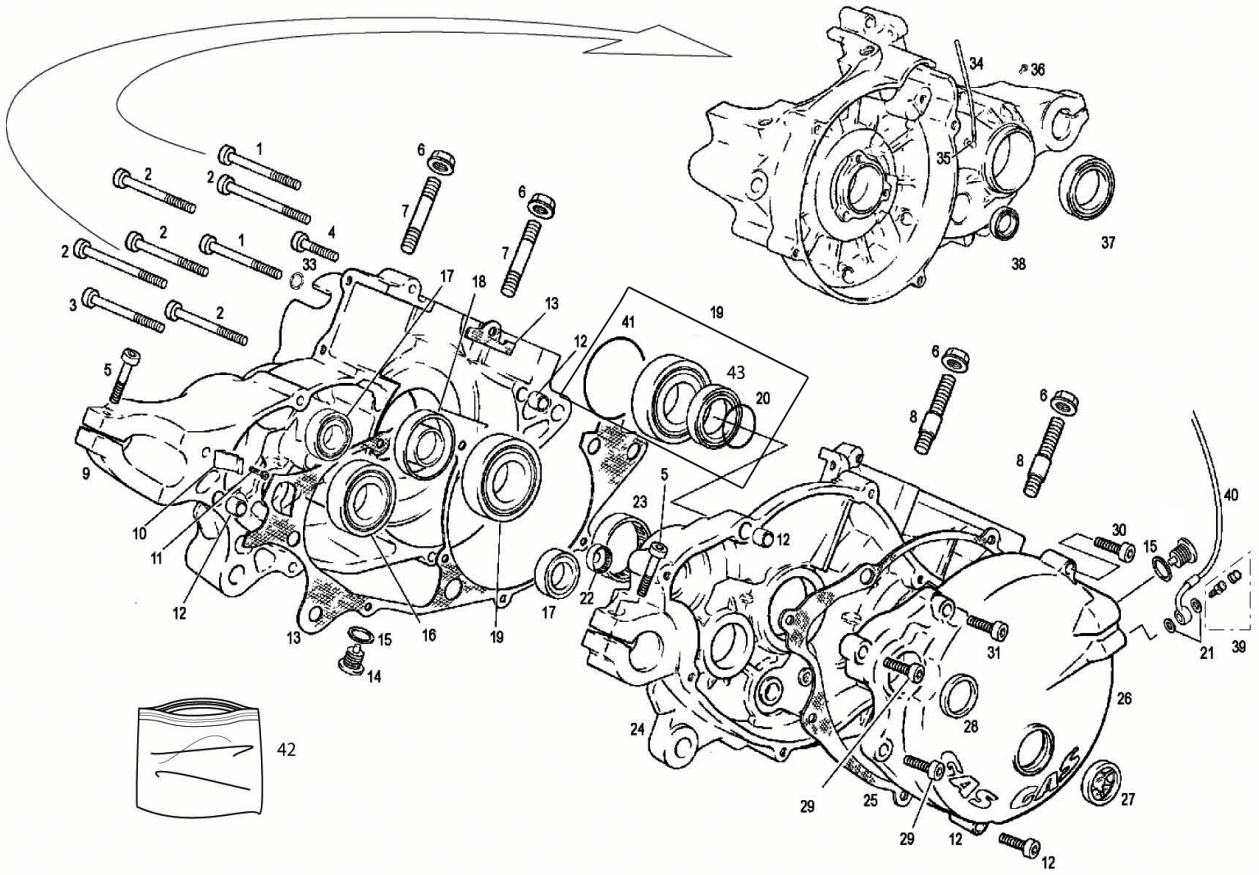
1
2
3
4
5
6
7
8
9
10
11
12
13
14
15
16
17
18
19
20
21
22
23
24
25
26
27
28
29
30
31
33
34
35
36
37
38
39
40
41
42
43

Nº	DESCRIPCION / DESCRIPTION	125	280 / 300	Cant.
1	ALLEN 5X65 ZINCADO NEGRO / 5X65 BLACK ALLEN BOLT		T0315065	2
2	ALLEN 5X55 ZINCADO NEGRO / 5X55 BLACK ALLEN BOLT		T0305055	5
3	ALLEN 5X75 ZINCADO NEGRO / 5X75 BLACK ALLEN BOLT		T0315075	1
4	ALLEN 5X35 DACROMET / 5X35 DACROMET ALLEN BOLT		T0305035	1
5	ALLEN 5X20 DACROMET / 5X20 DACROMET ALLEN BOLT		T0305020	2
6	TUERCA CILINDRO 8.8 ESP / CILINDER NUT		M01613001	4
7	ESPÁRRAGO CILINDRO / BASE STUD CYLINDER LEFT		MT280216023	2
8	ESPÁRRAGO CON CENTRAJE / BASE STUD CYLINDER RIGHT		MT280216056	2
9	CARTER MG TRATADO IZQ.TRIAL RACING		MT280310001RA	1
10	TOPE ARRANQUE TRIAL / STOP KICKSTART PEDAL		MT890202811	1
11	ALLEN 5X15 DACROMET / 5X15 DACROMET ALLEN BOLT		T0305015	1
12	CASQUILLO CENTRADOR CÁRTER 6X9X14 / CRANKCASE BUSHING		M01017000	4
13	JUNTA CÁRTER CENTRAL 0.2 MM / CENTER CRANKCASE GASKET		MT280344001	1
14	TAPÓN VACIADO ACEITE CON IMÁN / MAGNETIC OIL DRAIN PLUG		ME25610017	1
15	ARANDELA TIPO BUJÍA 12X18X2 / WASHER		MT280410030	2
16	COJINETE 25X47X12 / 25X47X12 / BEARING		MT280236159	1
17	COJINETE 15X32X9 6002 2RSL CAMBIO / BEARING GEAR		MT280236160	2
18	RETÉN 25X35X7 TEFLÓN CIGUEÑAL IZQUIERDO / OIL SEAL CRANK SHAFT		MT280212009	1
19	COJINETE CIGUEÑAL ST5225 / ST5225 CRANKSHAFT BEARING		MT31000CT2811	2
20	TÓRICA 25X1.5 NBR / O'RING		MT280212025	2
21	ARANDELA AM 10X14X1.5 / WASHER		BT280422007	2
22	COJINETE BK1412 ARRANQUE TRIAL / KICKSTART BEARING		MT280226067	1
23	COJINETE 35X45X12 NQ (EJE PRIMARIO) / 35X45X12 BEARING		MT280236158	1
24	CARTER MG TRATADO DRCHO. TRIAL PRO RACING		MT280310000RA	1
25	JUNTA TAPA EMBRAGUE / CLUTCH COVER GASKET		MT280244002	1
26	TAPA EMBRAGUE TRIAL PRO 300 RA 2005		MT280532001RA	1
27	VISOR NIVEL ACEITE EC400-4T / OIL LEVEL SIGHT GLASS		MFS400110015	1
28	RETÉN 18-24-4 TRIAL 2002 / 18-24-4 4 KICKSTART SHAFT SEAL		MT280226016	1
29	ALLEN 5X25 DACROMET / 5X25 DACROMET ALLEN BOLT		T0305025	2
30	ALLEN 5X30 DACROMET / 5X30 DACROMET ALLEN BOLT		T0305030	2
31	ALLEN 5X40 DACROMET / 5X40 DACROMET ALLEN BOLT		T0305040	1
32	TAPÓN LLENADO ACEITE / OIL FILL PLUG		M01016002	1
33	ARANDELA 5X9X1,5 COBRE / 5X9X1,5 WASHER		T4000509	1

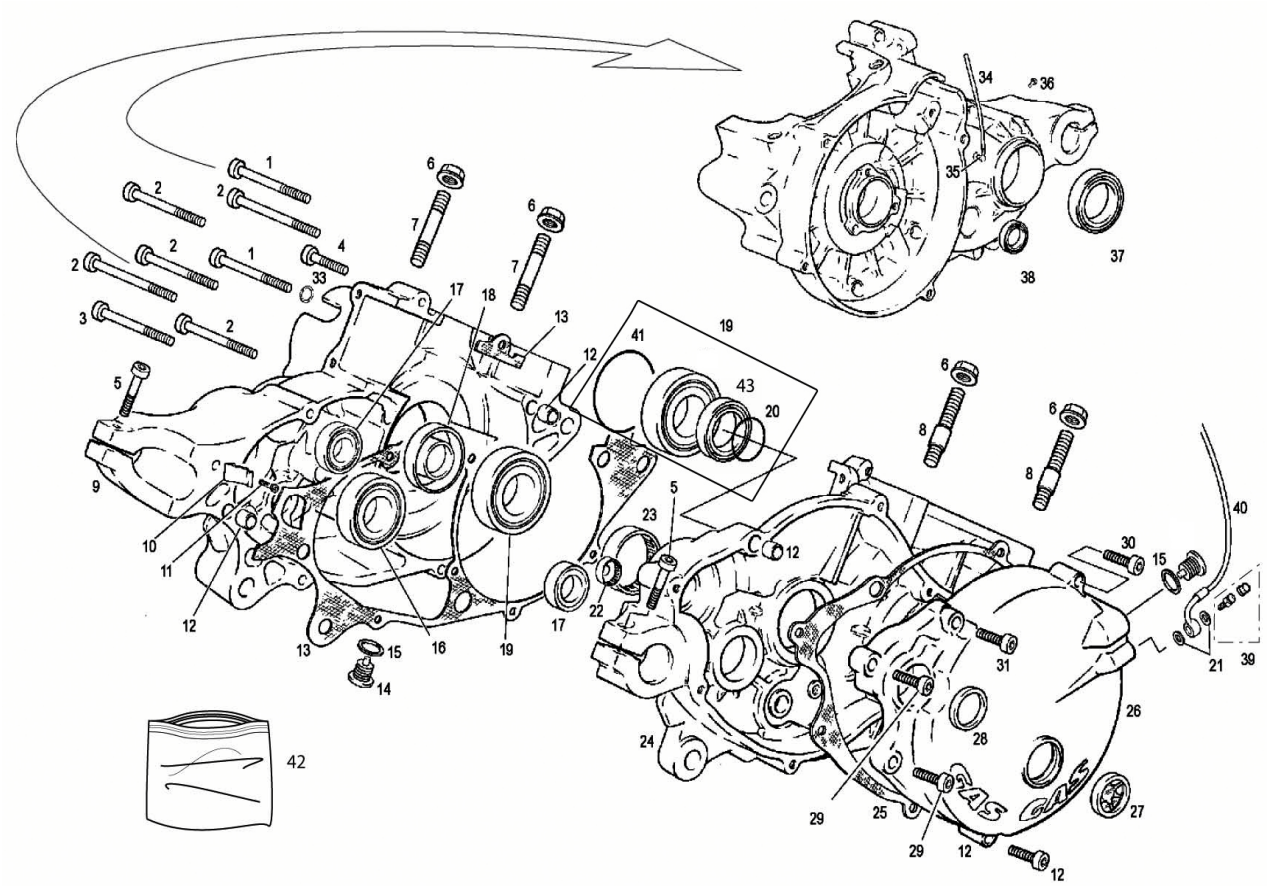
1
2
2
2
1
4
2
3
2
33
5
9
10
11
12
13
15
14
16
19
17
18
13
12
6
7
6
7
41
19
43
20
5
23
22
17
12
34
36
35
37
38
6
8
6
8
40
30
15
21
39
31
26
28
24
29
25
29
12
12
27
42

Nº	DESCRIPCION / DESCRIPTION	125 / 280 / 300	Cant.
34	TUBO DESVAPORIZADOR / DESVAP. HOSE	MT280210012	1
35	DESVAPORIZADOR / DESVAP.	MIT50010012	1
36	TAPÓN PASO ACEITE CÁRTER / OIL CARTER PLUG	MT280210021	1
37	RETÉN 30X40X7 / 30X40X7 SEAL	ME25636024	1
38	RETÉN EJE SELECTOR / AXLE SEAL	MT280236048	1
39	RACORD PINZA EMBRAGUE HIDRÁULICO / HIDRAULIC CLUTCH RACORD	BT280522106	1
40	LATIGUILLO EMBRAGUE / CLUTCH HOSE	BT47002809	1
41	TÓRICA COJINETE CIGU. 49X1.5 NBR / O'RING 49X1.5 NBR	MT280512028	2
42	KIT JUNTAS TXT PRO / TXT PRO GASKET SET	MT280244100	1
43	RETEN CIGÜEÑAL / CRANK SHAFT SEAL	MT280412006/1	2

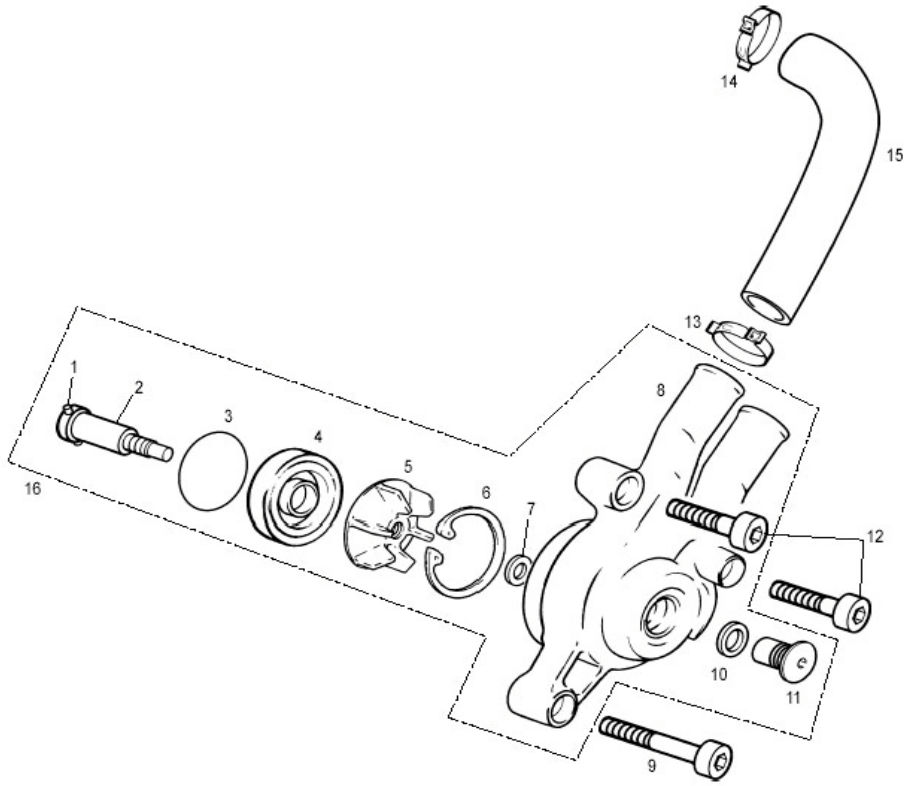
14
15
13
1
2
3
4
5
6
7
8
16
12
10
11
9

Nº	DESCRIPCION / DESCRIPTION	125 / 280 / 300	Cant.
1	PASADOR 3X22 EJE BOMBA / PUMP AXIS PIN	MT280218009	1
2	EJE BOMBA AGUA / AXLE TURBINE	MT280418006	1
3	TÓRICA 37X1.5 TAPA BOMBA AGUA / O'RING WATER PUMP COVER	MT280218008	1
4	RETÉN 10X35X7 DUO FKM / WATER PUMP SEAL	MT280210020	1
5	TURBINA BOMBA AGUA / WATER PUMP TURBINE	MT280218007	1
6	CIRCLIP 35 BOMBA AGUA / WATER PUMP CIRCLIP	MT280210019	1
7	ARANDELA TURBINA TRIAL / TURBINE WASHER	MT280218011	1
8	TAPA BOMBA AGUA / WATER PUMP COVER	MT280210008	1
9	ALLEN M5X40 DACROMET / M5X40 DACROMET ALLEN BOLT	T0305040	1
10	ARANDELA NYLON / NYLON WASHER	MT280218012	1
11	CASQUILLO BOMBA AGUA TRIAL 2002 / WATER PUMP BUSHING	MT280218002	1
12	ALLEN M5X35 DACROMET / M5X35 DACROMET ALLEN BOLT	T0305035	2
13	ABRAZADERA 20 / 20 CLAMP	L200035	1
14	ABRAZADERA COBRA 19 / 19 CLAMP	L200043	1
15	TUBO BOMBA – CILINDRO / PUMP TO CILINDER HOSE	BT280232017	1
16	CTO. TAPA BOMBA TRIAL PRO / COVER PUMP SET	MT280210008CT	1

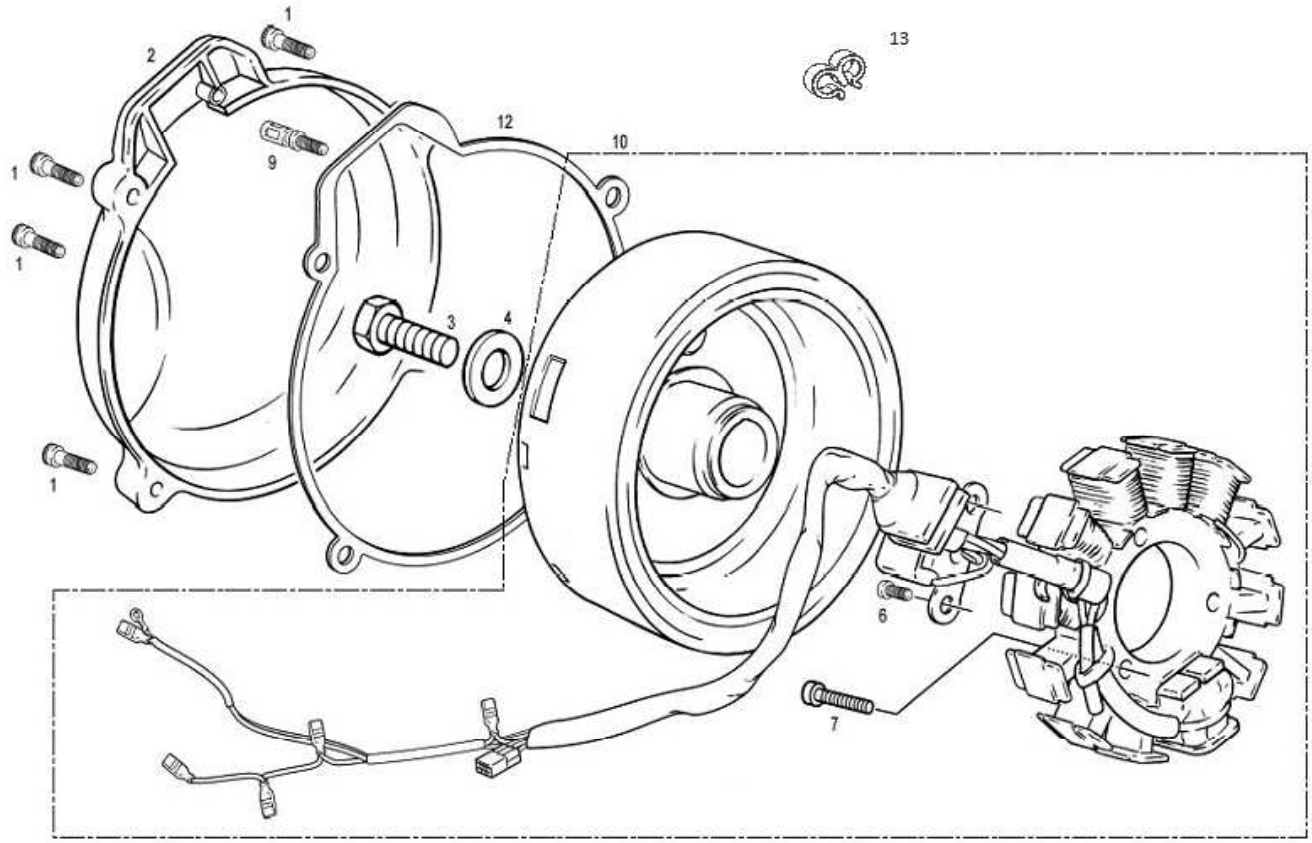
1
2
13
12
10
9
1
1
3
4
1
6
7

Nº	DESCRIPCION / DESCRIPTION	125	125 / 280 / 300	Cant.
1	ALLEN 5X20 / 5X20 ALLEN BOLT		T0305020N	5
2	TAPA ENCENDIDO TRIAL SXXI / COVER FLY-WHEEL		MT280710004	1
3	TORNILLO M10X25 / M10X25 SCREW		T0101025/2	1
4	ARANDELA GRUESA 10X23X4 / 10X23X4 WASHER		T4001024	1
7	ALLEN UFK NEGRO 5X25 / UFK 5X25 BLACK ALLEN BOLT		T0315025N	3
8	ADAPTADOR PICK / PICK ADAPTATOR			1
9	TORNILLO PICK UP TRIAL 2003 / PICK UP TRIAL 2003 SCREW		MT280334018	1
10	CTO. ENCENDIDO PRO 2005 / IGNITION SET	ET700001208	ET70002808	1
12	JUNTA TAPA VOLANTE ENCENDIDO / COVER FLY WHEEL GASKET		MT280344004	1
13	GRAPA SUJECCION CABLE		EE650202508	1

125 cc / 280 cc / 300 cc

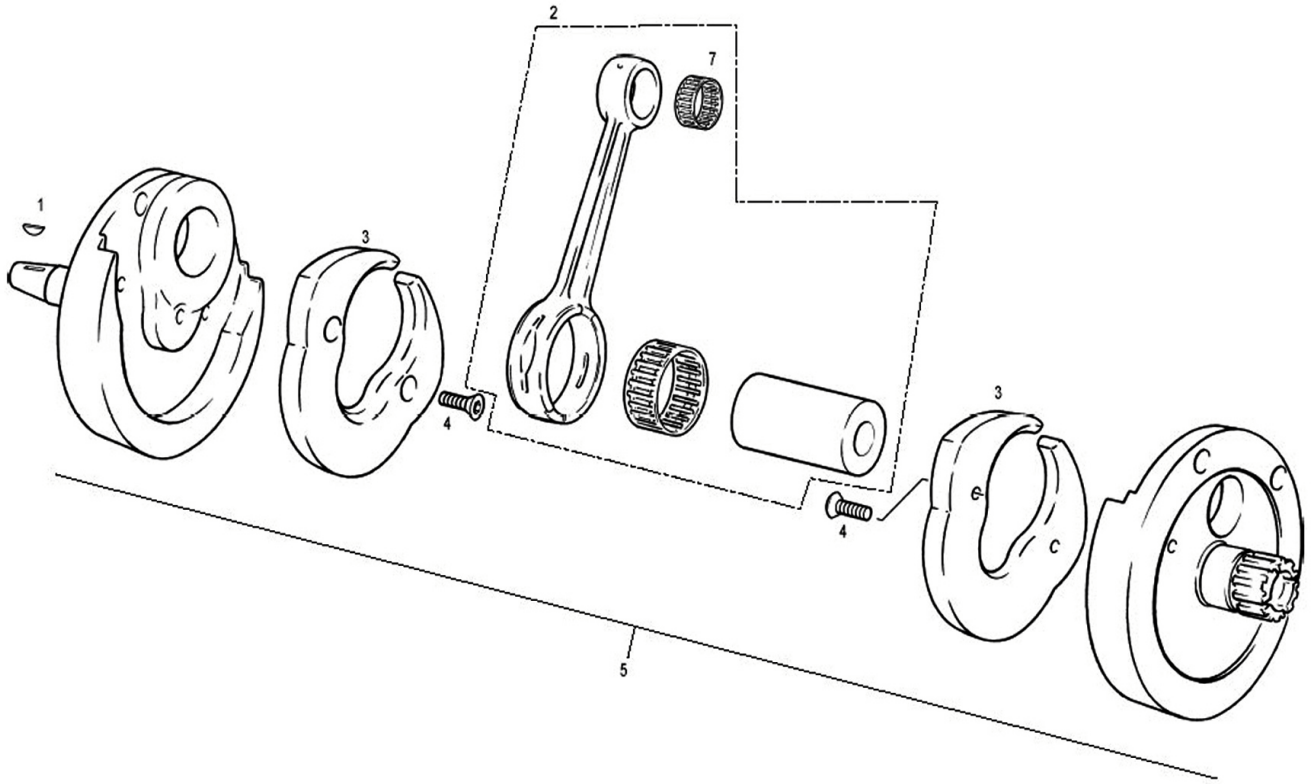

Nº	DESCRIPCION / DESCRIPTION	125	280 / 300	Cant.
1	CHAVETA D10X3X3.7 TRIAL 2002 / D10X3X3.7 KEY		MT280234016	1
2	CONJUNTO BIELA / CONNECTING ROD KIT, REPAIR	MT120212100	MT280212100	1
3	NYLON CONTRAPESO / CONTERWEIGHT NYLON	MT120212021	MT280212021	2
4	ALLEN CÓNICO UN15933 M6X16 / ALLEN BOLT		T0406016	4
5	CTO. CIGÜEÑAL TRIAL SXXI / CRANK SHAFT ASSEMBLY COMPLETE	MT120212000	MT280212000	1
7	COJINETE PIE DE BIELA / NEEDLES BEARING	M01411001	ME25616035	1

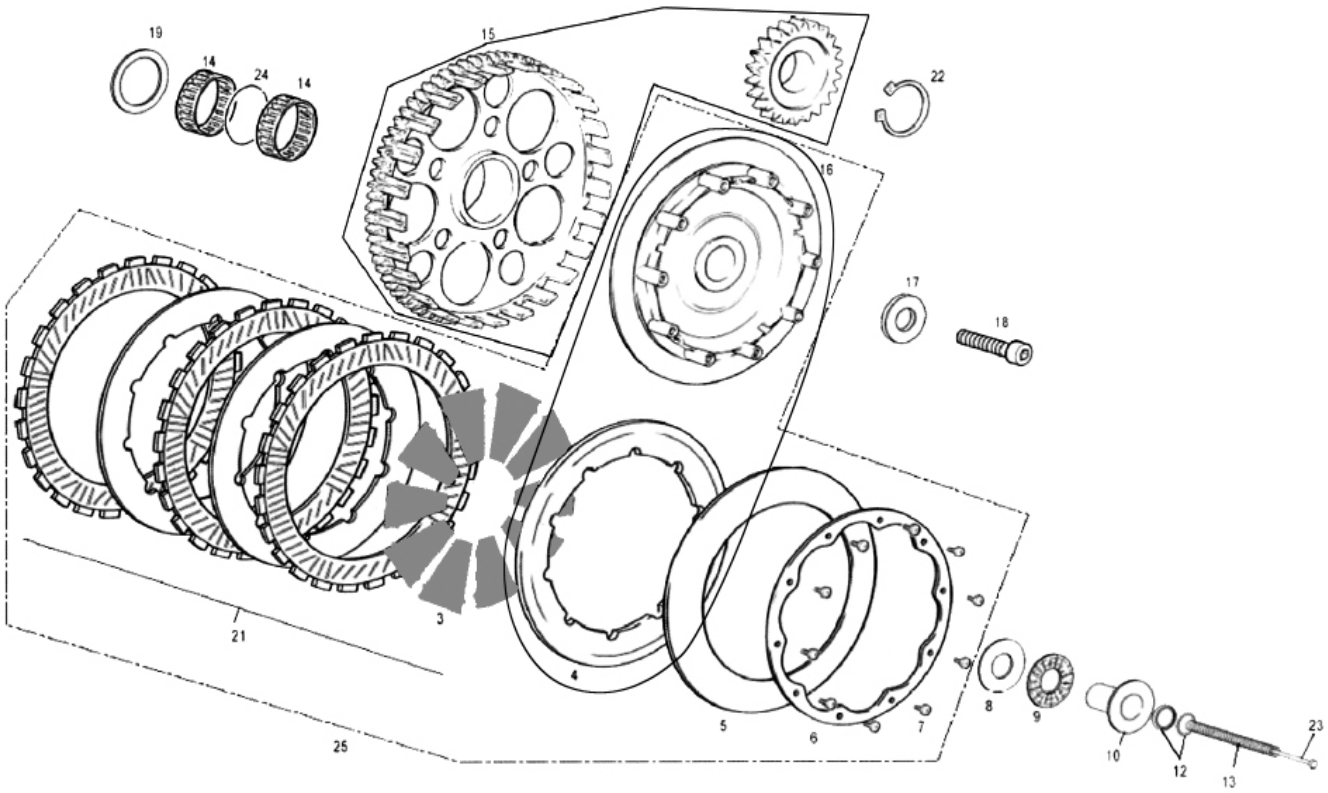
19
14
24
14
15
22
16
17
18
21
3
4
5
6
7
8
9
10
12
13
23
25

Nº	DESCRIPCION / DESCRIPTION	125 / 280 / 300	Cant.
3	DESMULTIPLICADOR EMBRAGUE TRIAL / CLUTCH RELEASE ARM	MT280632070	10
4	PRENSA EMBRAGUE TRIAL SXXI / PRESSURE PLATE	MT280632006	1
5	MUELLE EMBRAGUE TRIAL / CLUTCH SPRING	MT280632015	1
6	SOPORTE MUELLE EMBRAGUE / CLUTCH SPRING SUPPORT PLATE	MT120632045	1
7	ULS ESPECIAL PRENSA 4X10 / PRESSURE PLATE ULS BOLT	MT280332077	10
8	BOLET EMBRAGUE TRIAL 2003 / BEARING PLATE	MT280332014	1
9	COJINETE PRENSA EMBRAGUE AXK 17X30X2 / BEARING, CLUTCH END PLATE	MT280232043	1
10	PISTÓN BOMBIN EMBRAGUE TRIAL 2003 / CLUTCH PUMP PISTON	MT280332040	1
12	TÓRICA FKM / FKM O'RING	MT280432047	2
13	MUELLE PISTÓN EMBRAGUE TRIAL SXXI / CLUTCH PISTON SPRING	MT280332018	1
14	COJINETE G95 CORONA EMBRAGUE / CLUTCH BEARING	MT280432039	2
15	CTO. CORONA EMBRAGUE Y PIÑON TRIAL SXXI / OVERALL CROWN CLUTCH AND GEAR	MT280232003CT	1
16	CUBO EMBRAGUE SXXI / CLUTCH HUB	MT280632005CT	1
17	CASQUILLO SUJECIÓN EMBRAGUE / CLUTCH HUB BUSHING	MT280232080	1
18	ALLEN UFK 5X20 SUJECIÓN CUBO TRIAL 280 / CLUTCH HUB BOLT	MT280232081	1
19	ARANDELA 30.2X38X0.5 EMBRAGUE / CLUTCH WASHER	T4003038	1
21	CTO. DISCOS EMBRAGUE TRIAL 2004 / 2004 CLUTCH DISC SET COMPLETE	MT280432055	1
22	CIRCLIP E25 CIGÜEÑAL / CRANKSHAFT E25 CIRCLIP	MT280212023	1
23	GUÍA MUELLE PISTÓN / PISTON SPRING GUIDE	MT280432065	1
24	CIRCLIP CORONA EMBRAGUE / CLUTCH CIRCLIP	MT280432139	1
25	CTO. EMBRAGUE TRIAL PRO (HAMBURGUESA) / CLUTCH SET	MT280732069	1

125 cc.

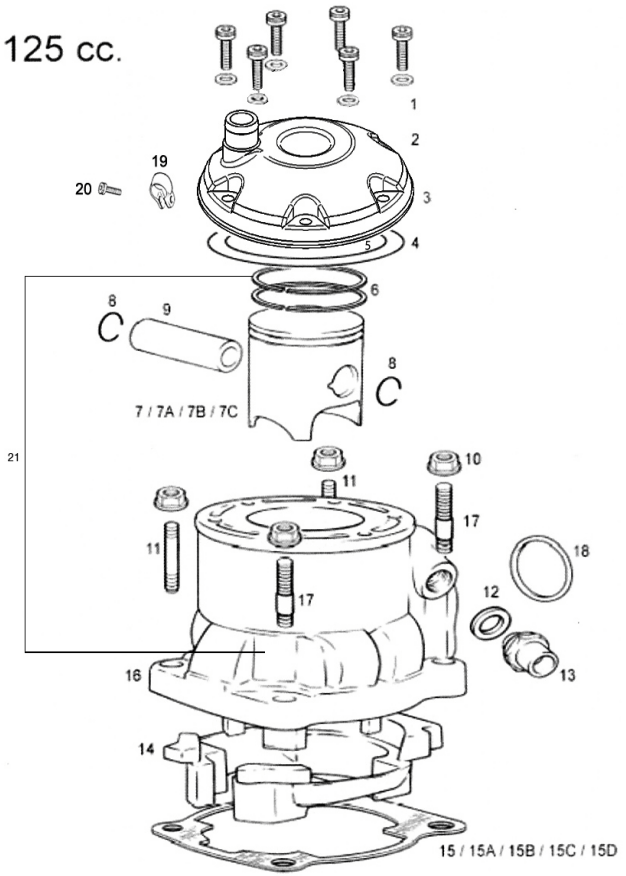

280 cc. / 300 cc.

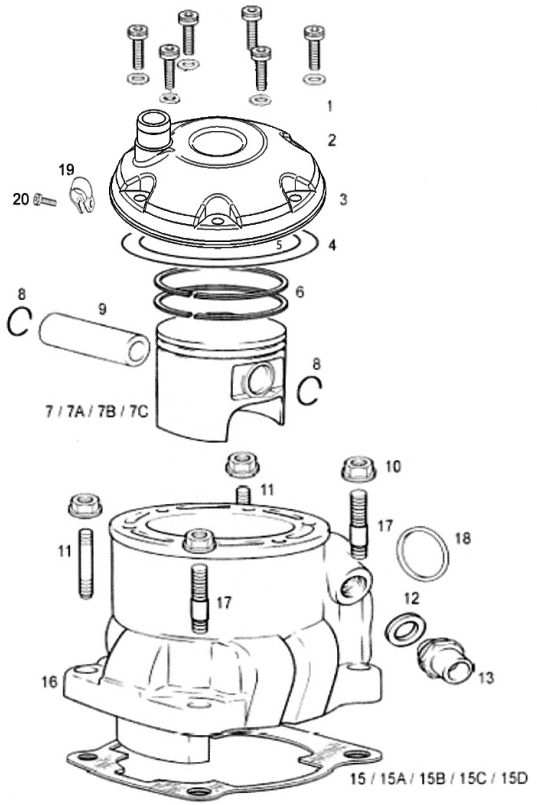

Nº	DESCRIPCION / DESCRIPTION	125	280	300	Cant.
1	ALLEN 6X25 / 6X25 ALLEN BOLT		T0306025	-	6
2	ARANDELA COBRE 6X10X1.5 / 6X10X1.5 WASHER		T4006008	-	6
3	CULATA TRIAL 2003 / CYL. HEAD	MT750001209	MT750002810	MT750003010	1
4	TÓRICA CULATA EXTERIOR / O'RING CYL. EXTERIOR	ME120116060	M01619135	-	1
5	TÓRICA CULATA INTERIOR / O'RING CYL. INTERIOR	MT120210040	M01619215	MT300416065	1
6	AROS PISTÓN / PISTON RING	MT120216040	MT710012808	MT710203010	2
7	PISTÓN TRIAL SXXI / PISTON TRIAL	MT120216020	MT71000CT2808	MT710003010	1
7A	PISTÓN LETRA B / PISTON B	MT120216121	MT71001CT2808	MT710013010	1
7B	PISTÓN LETRA C / PISTON C	MT120216122	MT280216122	MT300316122	1
7C	PISTÓN LETRA D / PISTON D	MT120216123	MT280216123	MT300316123	1
8	CIRCLIP PISTÓN / CLIP PISTON	ME25616126	MT280216126	MT280216126	2
9	BULÓN PISTÓN / PIN PISTON	MT120216125	MT280216125	MT280216125	1
10	TUERCA CILINDRO / CYLINDER NUT		M01613001	-	4
11	ESPÁRRAGO CILINDRO / STUD BOLT CYLINDER		MT280216023	-	2
12	ARANDELA PLANA FIBRA / FIBER WASHER		M01612026	-	1
13	RACORD CILINDRO / CYLINDER WATER HOSE NECK		MT280210013	-	1
14	ADAPTADOR CILINDRO / CYLINDER ADAPTER	MT120216087	-	-	1
15	JUNTA CILINDRO 0,8 mm. / 0,8 mm. GASKET CYLINDER BASE		MT280244000	-	1
15A	JUNTA CILINDRO 0,3 mm. / 0,3 mm GASKET CYLINDER BASE		MT208224009	-	1
15B	JUNTA CILINDRO 1 mm. / 1 mm. GASKET CYLINDER BASE		MT280244010	-	1
15C	JUNTA CILINDRO 0,5 mm. / 0,5 mm. GASKET CYLINDER BASE	MT120244000	MT942002810	MT942002810	1
15D	JUNTA CILINDRO 0,15 mm. / 0,15 mm. GASKET CYLINDER BASE		MT280244015	-	1
16	CILINDRO TRIAL / CYLINDER	MT120716022	MT70002809	MT70003009	1
17	ESPÁRRAGO CON CENTRAJE / STUD WITH CENTER		MT280216056	-	2
18	JUNTA ESCAPE / EXHAUST GASKET		MT280244012	-	1
19	GRAPA SUJECCION CABLES / WIRE SUPPORT	ET750502809	ET750502809	ET750502809	1
20	ALLEN 4X6 ZINCADO / M4X6 ALLEN	T0304006	T0304006	T0304006	1
21	CTO. CILINDRO Y PISTON / SET CYLINDER AND PISTON	MT120716022CT	MT70000CT2809	MT70000CT3009	1

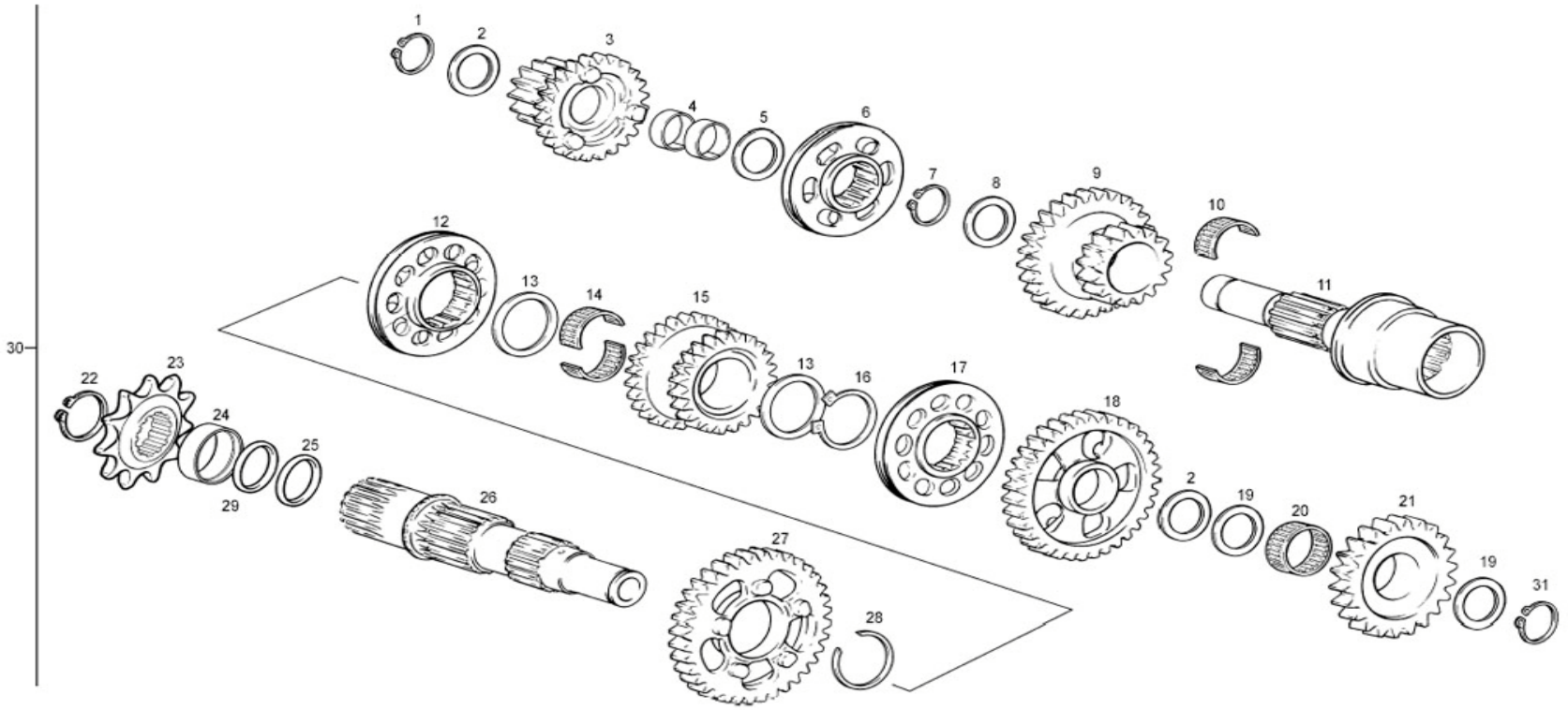
1
2
3
4
5
6
7
8
9
10
11
12
13
14
15
13
16
17
18
2
19
20
21
19
31
22
23
24
25
29
26
27
28
30

Nº	DESCRIPCION / DESCRIPTION	125 / 280 / 300	Cant.
1	CIRCLIP E15 DIN471 / E15 CIRCLIP	MT280236163	2
2	ARANDELA 15,2X23X0,5 / 15,2X23X0,5 WASHER	T4001523	4
3	PIÑÓN 2 / PINION 2	MT280236071	1
4	DOLLA / BUSHING	MT280236164	2
5	ARANDELA 17X23X0,5 / 17X23X0,5 WASHER	T4001723	1
6	DESPLAZABLE PRIMARIO / PRIMARY SELECTOR DISC	MT280236073	1
7	CIRCLIP E20 DIN 471 REBAJADO / E20 CIRCLIP	MT280236165	1
8	ARANDELA 20X25X0,5 / 20X25X0,5 WASHER	T4002025	1
9	PIÑÓN 3 / PINION 3	MT280236072	1
10	JAULA AGUJAS / NEEDLE BEARING	MT280236162	2
11	EJE PRIMARIO / PRIMARY SHAFT	MT280236070	1
12	DESPLAZABLE 2 SECUNDARIO / SECONDARY SELECTOR DISC	MT280236080	1
13	ARANDELA 22X27X0,5 / 22X27X0,5 WASHER	T4002227	2
14	JAULA AGUJAS / NEEDLE BEARING	MT280236161	2
15	PIÑÓN 5 / PINION 5	MT280236078	1
16	CIRCLIP E22 DIN471 / E22 CIRCLIP	MT280236166	1
17	DESPLAZABLE 3 SECUNDARIO / SECONDARY SELECTOR DISC	MT280236079	1
18	PIÑÓN 3 SECUNDARIO / SECONDARY 3 GEAR	MT280236076	1
19	ARANDELA / WASHER	M02622001	2
20	JAULA AGUJAS / NEEDLE BEARING	MT280226015	1
21	PIÑÓN INTERMEDIO ARRANQUE / GEAR, IDLE KICKSTART	MT880002810	1
22	CIRCLIP E25 / E25 CIRCLIP	MT280212023	1
23	PIÑÓN CADENA SALIDA / SPROCKET, COUNTERSHAFT z.11	MT280236525	1
23B	PIÑÓN CADENA SALIDA / SPROCKET, COUNTERSHAFT z.09	MT120236526	1
23C	PIÑÓN CADENA SALIDA / SPROCKET, COUNTERSHAFT z.10	MT200236525	1
24	CASQUILLO RETÉN SALIDA CAMBIO / SHIFT SEAL BUSHING	MT280236046	1
25	TÓRICA 25X2 NBR / NBR 25X2 O'RING	ME25632025	1
26	EJE SECUNDARIO / SECONDARY SHAFT	MT280236075	1
27	PIÑÓN 2 SECUNDARIO / SECONDARY 2 GEAR	MT280236077	1
28	CIRCLIP SW25 / SW25 CIRCLIP	MT280236167	1
29	TÓRICA 25X1,5 NBR / 25X1,5 O'RING	MT280212025	1
30	CTO. CAMBIO TRIAL / TRANSMISSION COMPLETE	MT280236010	1
31	CLIP DE 15MM PIÑÓN INT. ARRANQUE / 15MM. CIRCLIP	M02633000	1

(PARA DELLORTO / FOR DELLORTO)

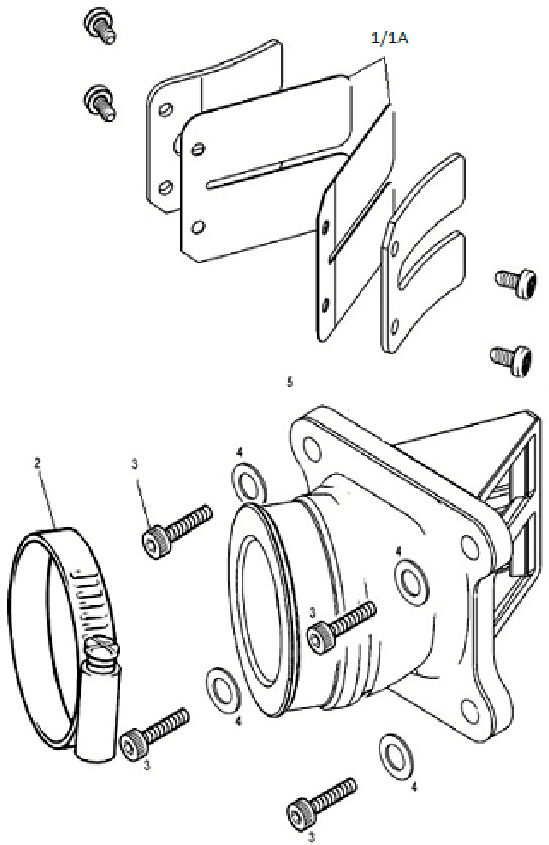

(PARA KEIHIN / FOR KEIHIN)

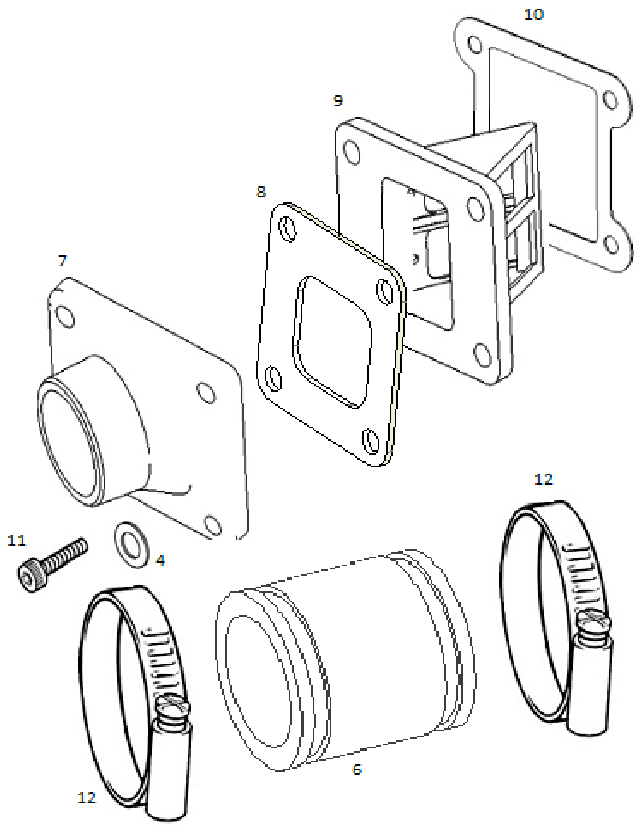

Nº	DESCRIPCION / DESCRIPTION	125 /280 /300	Cant.
1	JUEGO LÁMINAS ADMISIÓN / REEDS SET	MT280416041	2
2	ABRAAZADERA S/44/9 WU	BT280328038	1
3	ALLEN 5X15 DACROMET / 5X15 DACROMET ALLEN BOLT	T030515	4
4	ARANDELA 5X12X1,5 / 5X12X1,5 WASHER	T4005012	4
5	CAJA LÁMINAS TRIAL / REED BLOCK ASSY	MT280416021	1
6	ADAPTADOR TUBERA-CARBURADOR RACING 2006 CEX	MT300616133	1
7	TUBERA ADMISION TRIAL ALUM. RACING 2006 CEX	MT300616131	1
8	JUNTA CAJA LAMINAS-TUBERA RACING 2006 CEX	MT300644105	1
9	CAJA LAMINAS 250-270-280-320 CEX	M01617200	1
10	JUNTA CAJA LAMINAS TRIAL SXXI	MT280244005	1
11	TORNILLO ALLEN UFK GUIADO M5X25 GEOMET NEGRO 12.9	T130502513602	1
12	ABRA.30-45/9 W2 CARBURADOR KEIHIN CEX	B640005	2

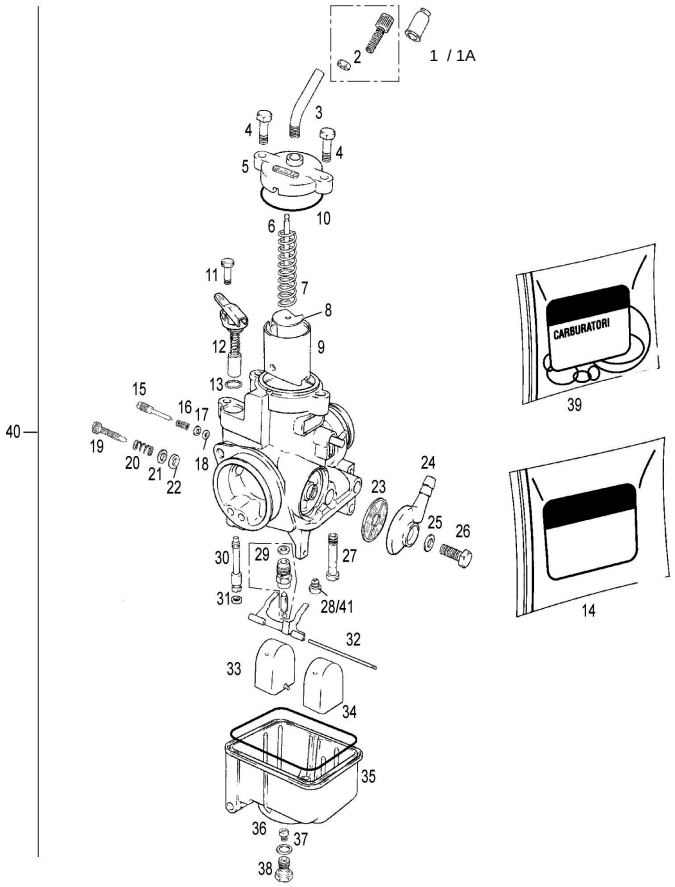
1 / 1A
2
3
4
4
5
6
7
8
9
10
11
12
13
14
15
16
17
18
19
20
21
22
23
24
25
26
27
28/41
29
30
31
32
33
34
35
36
37
38
39
40
CARBURATORI

Nº	DESCRIPCION / DESCRIPTION	125	280 / 300	Cant.
1	CAPUCHÓN TENSOR CABLE GAS / ADJ. TENSION THROTTLE CABLE		M09001055	1
1A	CAPUCHON TENSOR CABLE GAS CEX		M09001055	1
2	CTO. TENSOR CABLE / CABLE TENSION SET SCREW		M09001230	1
3	TENSOR CABLE GAS / CABLE TENSION TUBE		M09001032	1
4	TORNILLO TAPA CARBURADOR / SCREW COVER CARBURETOR		M09001025	2
5	TAPA CARBURADOR / COVER CARBURETOR		M09001156	1
6	AGUJA D36 3º PUNTO / NEEDLE D36		M09003136	1
7	MUELLE COMPUERTA / SPRING SLIDE		M09001015	1
8	PLANCHA SUJECIÓN CABLE GAS / CABLE RETAINER PLATE		M09001010	1
9	COMPUERTA / VALVE SLIDE	M09002050	M09002060	1
10	TÓRICA TAPA CARBURADOR / O		M09001050	1
11	TORNILLO SUJ. STARTER / CHOKE SCREW		M09001110	1
12	MANDO STARTER / CHOKE LEVER ASSY.		M09001105	1
13	TÓRICAS STARTER / CHOKE O'RING		M09001065	1
14	KIT CARBURACIÓN / CARBURETOR KIT	MT25000071211	MT25000133011	1
15	TORNILLO REG. ENTRADA AIRE / REG. ENTRANCE SCREW		M09001115	1
16	MUELLE TORNILLO REG. AIRE / SPRING SCREW REG. AIR		M09001120	1
17	ARANDELA TORN. REG. AIRE / WASHER SCREW BOLT REG. AIR		M09001125	1
18	TÓRICA TORNILLO REG. AIRE / O'RING SCREW BOLT REG. AIR		M09001075	1
19	TORNILLO REG. COMPUERTA / SCREW BOLT REG. SLIDE		M09001035	1
20	MUELLE TORNILLO REG. COMPUERTA / SPRING SCREW SLIDE		M09001040	1
21	ARANDELA TORNILLO REG. COMP. / WASHER SCREW REG. SLIDE		M09001045	1
22	TÓRICA TORNILLO REG. COMP. / O'RING SCREW REG. SLIDE VALVE		M09001060	1
23	JUNTA PIPETA GASOLINA / FUEL FILTER DISC		M09001095	1
24	PIPETA ENTRADA GASOLINA / FUEL ENTRY TUBE		M09001135	1
25	JUNTA TORNILLO PIPETA / GASKET SCREW BOLT		M09001100	1
26	TORNILLO PIPETA / BOLT		M09001140	1
27	EMULSOR / NEEDLE JET		M09005271	1
28	CHICLE RALENTÍ 30 / JET SLOW 30		M09004035	1
29	VÁLVULA FLOTADOR / FLOAT VALVE		M09001200	1
30	CHICLE STARTER 60 / JET CHOKE 60		M09007060	1
31	TÓRICA CHICLE STARTER / O'RING JET CHOKE		M09001070	1
32	EJE FLOTADOR / FLOAT SHAFT		M09001145	1

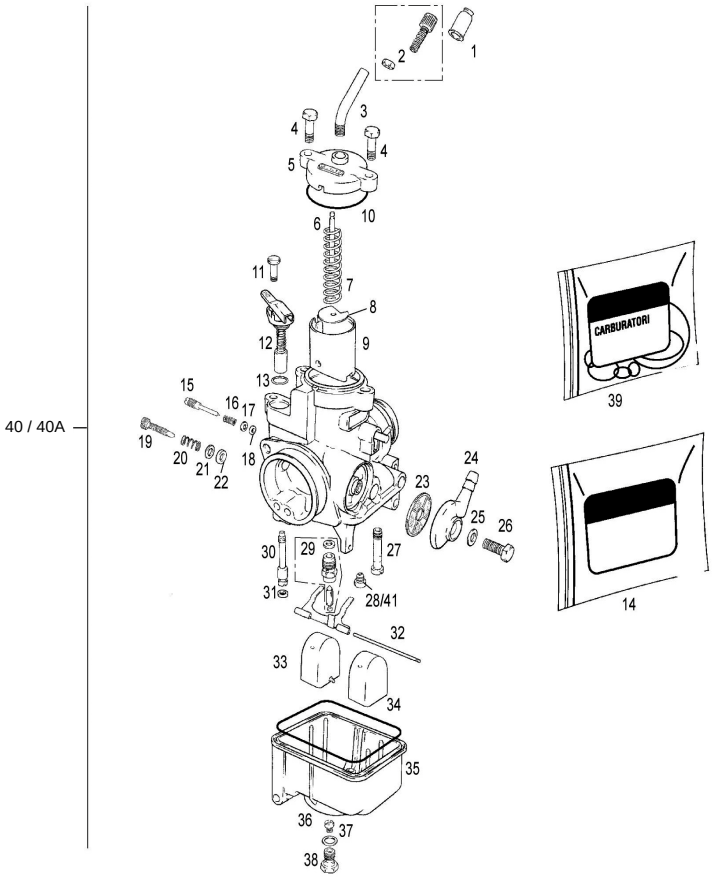
40 / 40A
1
2
3
4
4
5
10
6
11
7
8
12
9
13
15
16
17
19
20
21
22
18
23
24
25
26
30
29
27
31
28/41
32
33
34
35
36
37
38
CARBURATORI
39
14

Nº	DESCRIPCION / DESCRIPTION	125 / 280 / 300	Cant.
33	FLOTADOR 2X2 / FLOAT 2X2	M09008036	2
34	TÓRICA CUBETA GASOLINA / O'RING FUEL BOWL	M09001085	1
35	CUBETA GASOLINA / FUEL BOWL	M09001150	1
36	CHICLE PRINCIPAL / MAIN JET	M09006118	1
37	TÓRICA TAPÓN CUBETA / O'RING	M09001090	1
38	TAPÓN CUBETA GASOLINA / FUEL BOWL BOLT	M09001155	1
39	KIT JUNTAS CARBURADOR / GASKET CARBURETOR KIT	M09001101	1
40	CARBURADOR PHBL 26 BS / PHBL CARBURETOR COMPLETE	MT280290000	1
40A	CARB. KEIHIN PWK28 G03A0 1000-G03-A000 CEX	MT280390000RA	1
41	CHICLE ALTA 125 KEIHIN PVK28	MT25000033011	1